Qume
A Subsidiary of ITT

Manual

SPRINT 11 PLUS
Operator

December 1983

2350 Qume Drive • San Jose, California 95131 • TWX 910-338-0232 • (408) 942-4000

Qume®
A Subsidiary of ITT

FCC WARNING

This equipment generates, uses, and can radiate radio frequency energy and if not installed, maintained, and used in accordance with instructions contained in Qume manuals, may cause interference to radio communications. Equipped with a Qume power supply and covers, this equipment has been tested and been found to comply with the limits for a Class A computing device pursuant to Subpart J of Part 15 of FCC Rules, which are designed to provide reasonable protection against such interference when operated in a commercial environment. Operation of this equipment in a residential area is likely to cause interference in which case the user, at his own expense, will be required to take whatever measures may be required to correct the interference.

Reorder Number 32026

Printed in Taiwan

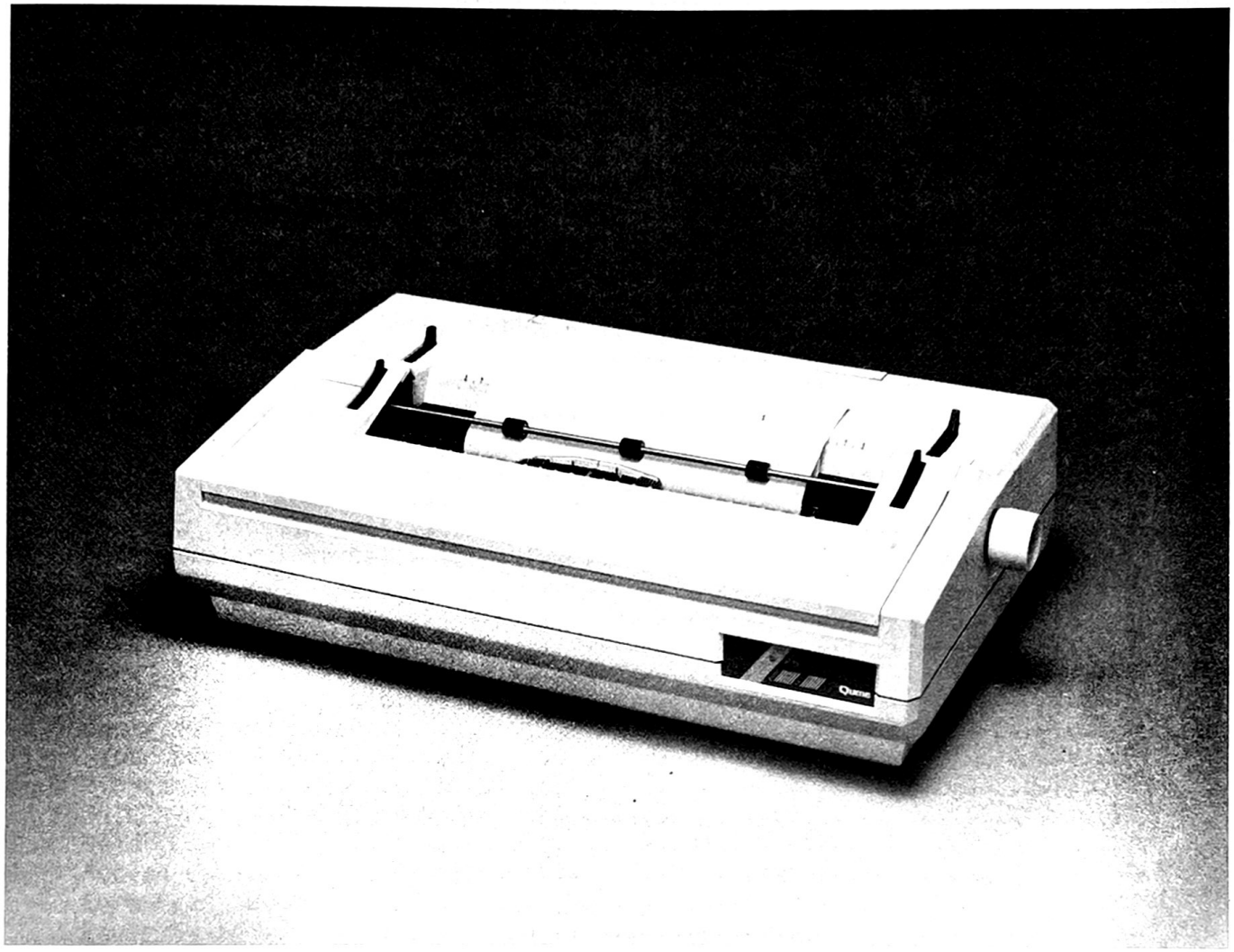

FOREWORD

This manual is one of a group of publications for the SPRINT 11 PLUS. Although all the publications in this group describe the SPRINT 11 PLUS printer, each manual addresses a unique audience. Thus, some subjects appear in several publications, with the text being more or less technically detailed as required for the intended reader.

The following is a list of SPRINT 11 PLUS related publications:

Title	Publication Number
SPRINT 11 PLUS Field Maintenance Manual	32077
Supplies Catalog	38012
Printers and Accessories Catalog	33032

TABLE OF CONTENTS

PAGE

BASIC MAINTENANCE.....25
CLEANING PROCEDURES.....25
HELPFUL HINTS TO MAINTAIN PRINT QUALITY.....29
PRACTICES TO AVOID.....30
IF YOU HAVE TROUBLE.....30
REPLACING THE AC LINE FUSE.....33
ERROR CONDITIONS.....33
A NOTE ABOUT STATIC ELECTRICITY.....34

SPECIFICATIONS.....37

INDEX

LIST OF FIGURES

FIGURE PAGE

1 The SPRINT 11 PLUS Printer.....1
2 Bidirectional Forms Tractor and Paper Handling System.....3
3 SpeedFeed 1 Cut Sheet Feeder.....4
4 Removing the Operator Access Cover.....7
5 SPRINT 11 PLUS Controls and Indicators.....8
6 Configuration Switch Functions.....12
7 Rear Panel Connectors and Controls.....14
8 Installing the QUME CONNECTION Interface Module.....15
9 "Barber Pole" Printout from Printer Self-Test.....17
10 Using the Card Guide to Position Paper.....19
11 Changing a Ribbon Cartridge.....20
12 Changing a Printwheel.....22
13 Platen and Side Frame Components.....27
14 Releasing the Platen Latches.....27
15 Removing the Platen.....28

INTRODUCTION

OVERVIEW

This user manual describes Qume's SPRINT 11 PLUS letter quality printer. The SPRINT 11 PLUS, available with a variety of 96 character "daisy" printwheels, produces letter quality printouts at maximum printspeeds of 40 or 55 characters per second (cps). As the 40 and 55 cps versions of the Sprint 11 perform in nearly identical fashion, the instructions in this manual can be applied to both models.

The SPRINT 11 PLUS is designed for interfacing to a computer system via a QUME CONNECTION interface module. Available in a variety of configurations (e.g., RS-232-C, Centronics, IEEE), the QUME CONNECTION supplies the mechanical connections, electrical circuitry, and program intelligence required for your computer to communicate with the SPRINT 11 PLUS. Refer to your specific QUME CONNECTION Interface Manual for a detailed discussion of the interface module and its command set.

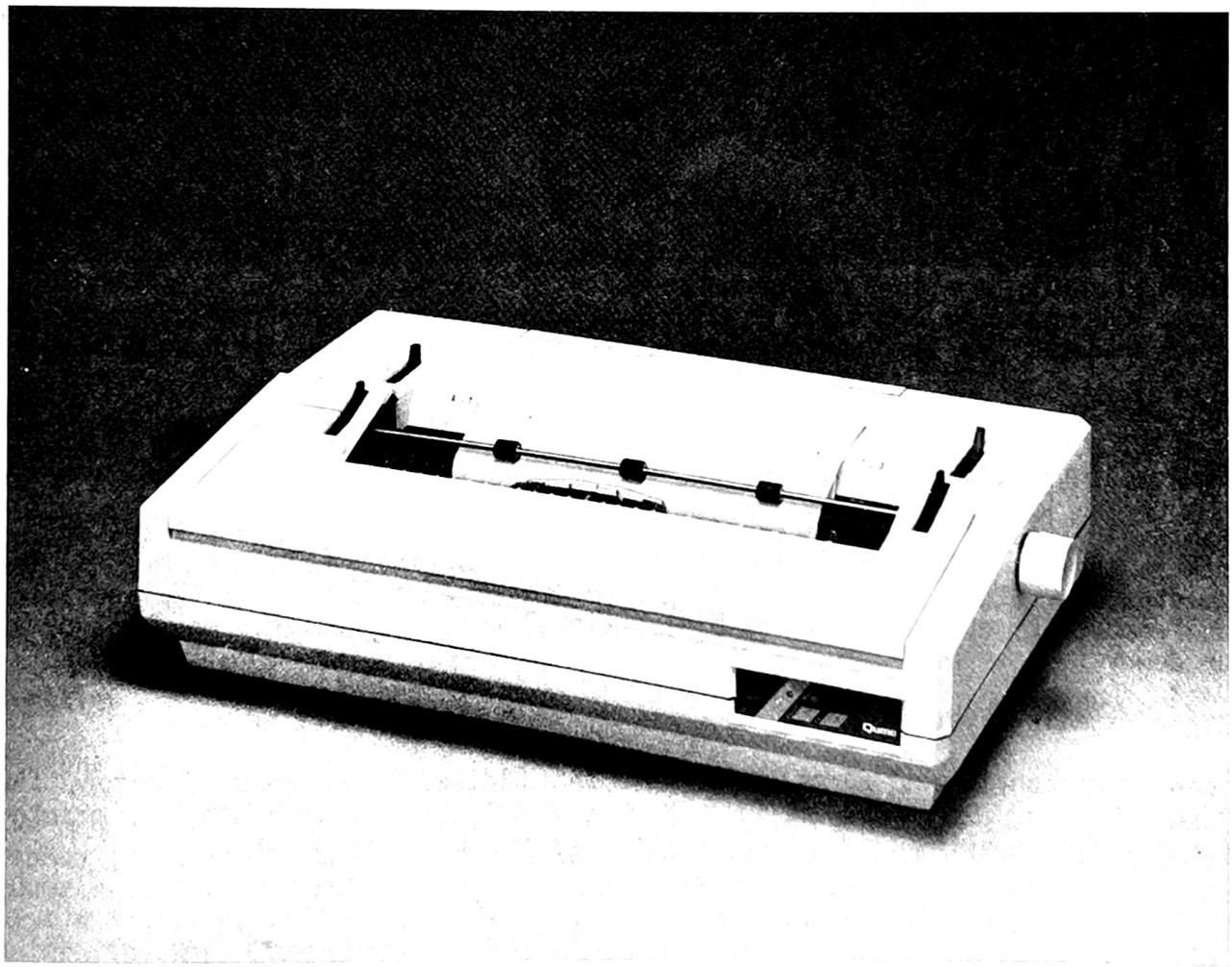

0110

Figure 1. The SPRINT 11 PLUS Printer

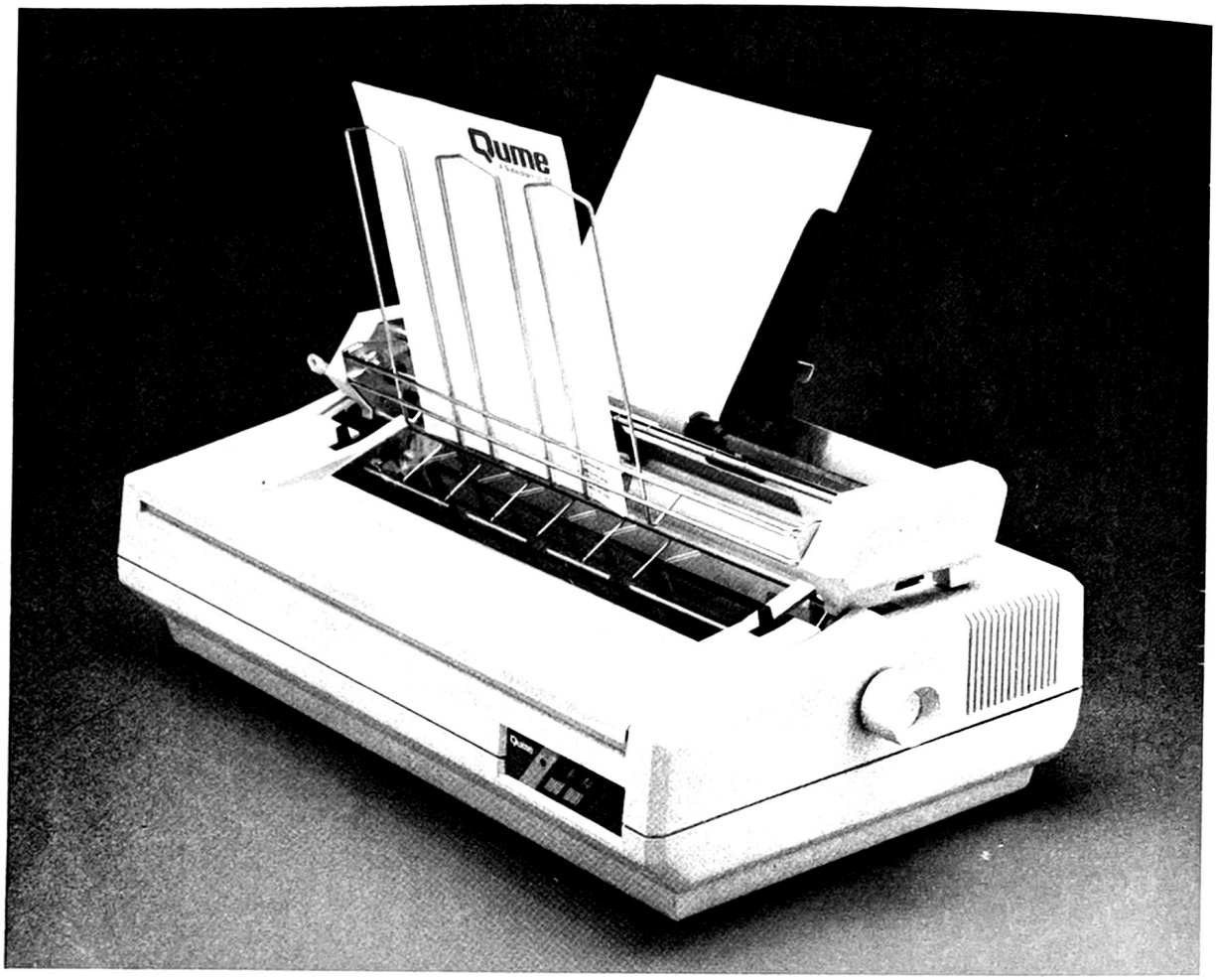

0099

Figure 3. SpeedFeed 1 Cut Sheet Feeder

Printwheels

Over one hundred different Qume printwheels are available in either monospacing (WP) or proportional spacing (WPS) in a variety of type styles. Some of the more popular printwheel styles are listed in Table 1.

Table 1. Selected Qume Printwheels

PRINTWHEEL STYLE	QUME PART NUMBER
WP Courier 10	82050
WP Prestige Elite 12	82052
WP Orator 90% 10	82057
WP Letter Gothic 12	82089
Bilingual Prestige Elite 12	82054
ASCII 96 Prestige Elite	82167
WP Gothic 15	82090
Bilingual Courier 10	82053
WP Pica 10	82051
WPS Essay	82199
WPS Arcadia	82193

WP printwheels are designed to be used with a fixed amount of horizontal spacing (pitch) for each character. The designations 10, 12, or 15 that are appended to the name of each WP printwheel indicate the pitch (number of characters printed per inch). In fixed spacing printing, thin letters such as "i" or "t" are given the same amount of space as the wider characters "W" or "M". Although 10 and 12 pitch printwheels are the most popular, 15 pitch printwheels provide excellent results for specialized applications such as spreadsheet-type accounting programs. With a 15 pitch printwheel, you can print out 132 character-per-line formats in less than nine inches of space.

WPS printwheels are designed such that character width differs from one character to another. These printwheels require variable carriage displacement (horizontal spacing) proportional to the width of the characters. Printing with proportional spacing makes the appearance of the text more aesthetically pleasing since each letter receives the exact space proportional to its width.

The SPRINT 11 PLUS provides a WPS operating mode (DIP switch or software command selectable) that produces automatic proportional spacing when used with a WPS proportional spacing printwheel; your computer does not have to perform any special preprocessing of data. Special sequence printwheels, such as the Deutschland WPS, require that the Twintellect switch be on. Detailed descriptions of all Qume printwheels can be found in Qume Supplies Catalog, Qume publication 38012.

PRODUCT DESCRIPTION

This section identifies basic printer parts.

MECHANICAL CONTROLS

The mechanical controls on the SPRINT 11 PLUS resemble those on a standard office typewriter. Spend a few minutes familiarizing yourself with the operator controls and indicators illustrated in Figure 5.

Operator Access Panel

This panel provides access to the carriage area of the printer, allowing you to change the ribbon and printwheel and to easily perform operator maintenance. A protective interlock switch prevents the printer from printing while the operator access panel is open. To open the operator access panel, slide the panel toward you until it tilts down and hangs parallel to the front control panel as shown in Figure 4.

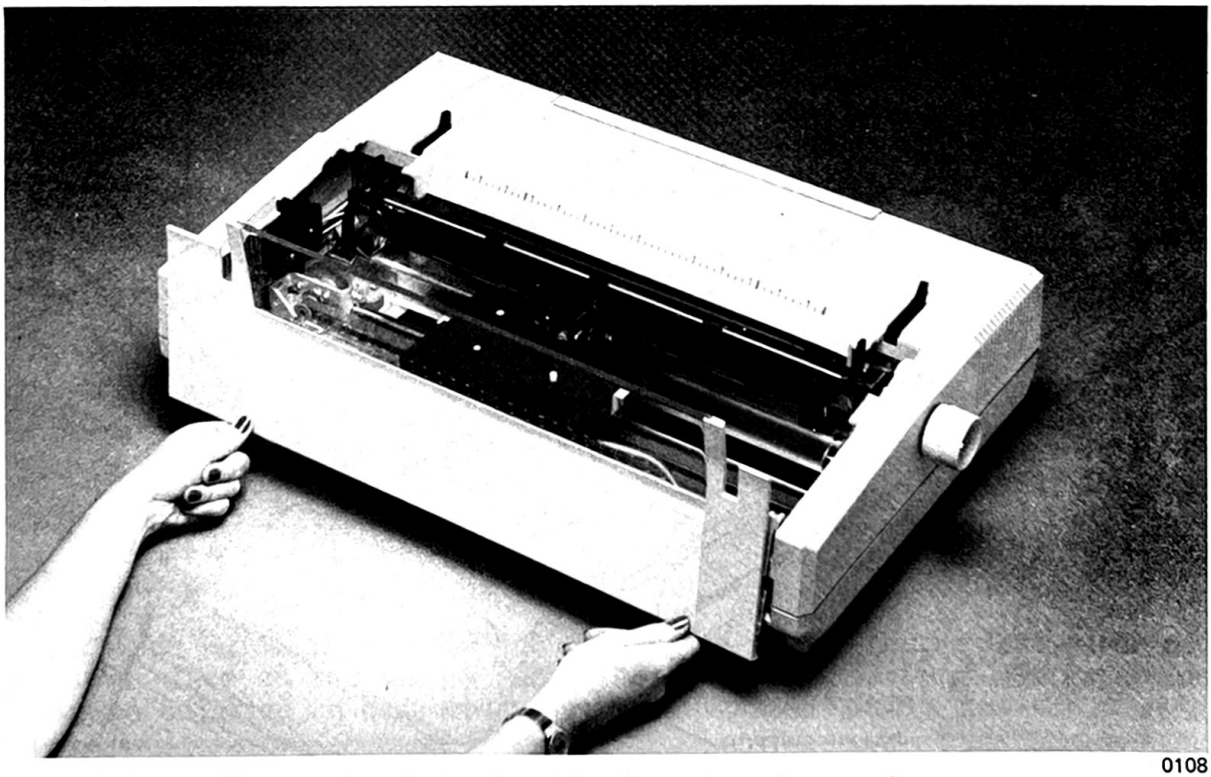

0108

Figure 4. Removing the Operator Access Cover

Access Cover Inserts

Remove the access cover inserts if Qume's Bidirectional Forms Tractor or SpeedFeed 1 Cut Sheet Feeder is installed on the printer.

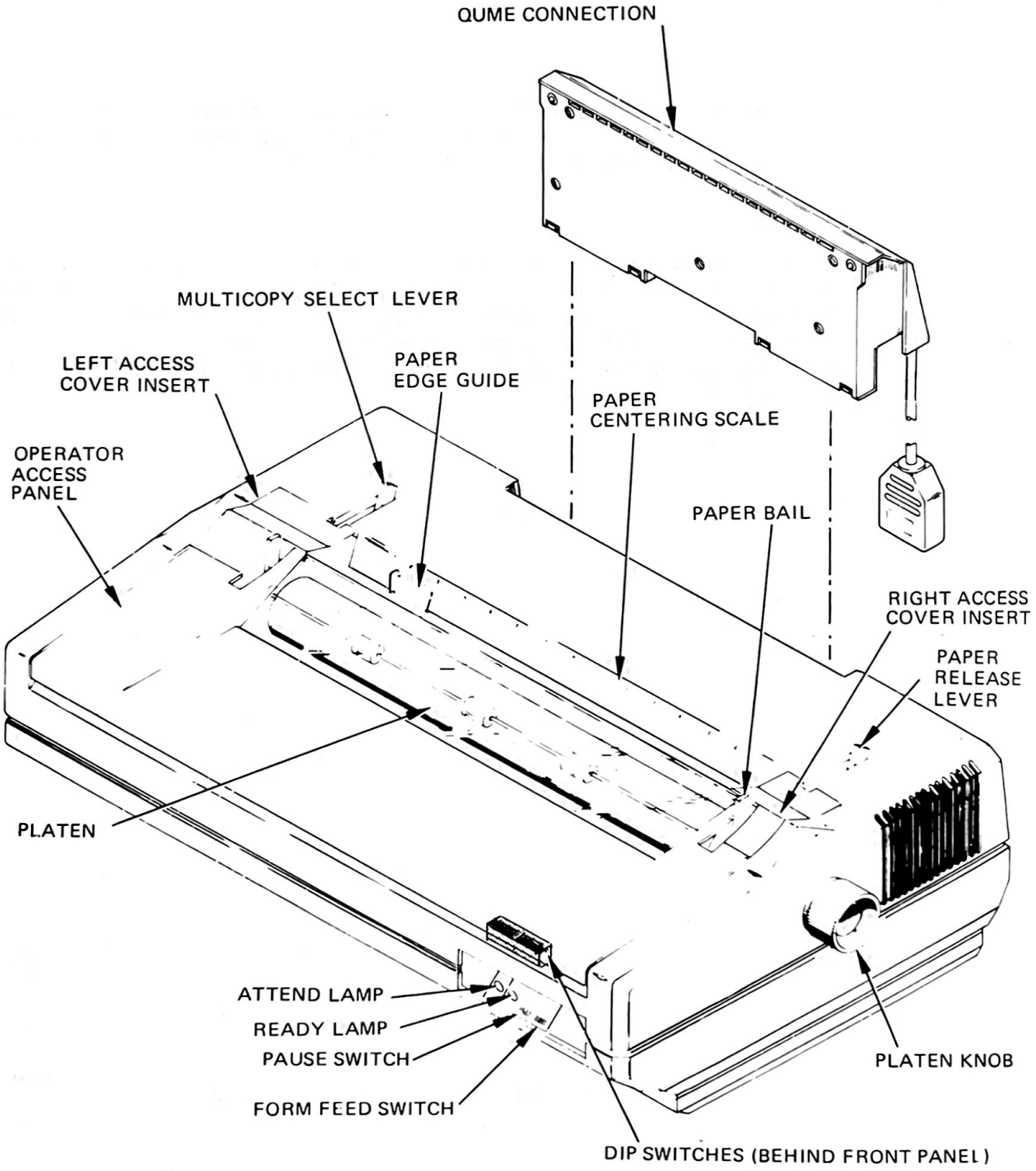

601-A-01

Figure 5. SPRINT 11 PLUS Controls and Indicators

Platen

The platen holds the paper or form in printing position. The cushion face on the platen presents the proper backing for the best print quality and for quiet operation.

Platen Knob

The platen knob moves the paper vertically during loading or unloading.

Multicopy Select Lever

The multicopy select lever adjusts the spacing between the printing mechanism and the platen. Poor print quality will result if this control is placed in the wrong position. For single part forms or ordinary paper, pull the Multicopy Select Lever toward you. For multipart forms or very thick paper, push the lever to the rear. The maximum number of copies that the printer can effectively handle at one time is six, or 0.025 inch total paper thickness.

Paper Bail

The paper bail holds the paper or form against the platen to prevent character smearing and to provide quiet operation. The paper bail is spring loaded against the platen during normal operation. Pull the paper bail forward when inserting paper.

Paper Centering Scale

This scale, similar to scales found on most typewriters, serves as a reference aid when you position paper in the printer.

Paper Release Lever

Pulling the paper release lever toward you (forward) releases the paper by removing the tension between the feed rollers (located below the platen) and the platen. This allows you to adjust the paper or form freely in any direction. The normal operating position of the paper release lever is to the rear. When the Bidirectional Forms Tractor accessory is installed, the paper release lever must always be in the forward position.

Paper Edge Guide

The Paper Edge Guide is a reference guide used to locate the left paper edge at the same place on the platen each time paper is inserted. The Paper Edge Guide may be adjusted to accommodate various paper widths.

Ribbon Out Sensor

The Ribbon Out Sensor, not visible in the illustration, detects when a ribbon cartridge is installed in the printer. The sensor can also detect when a Multistike IV carbon ribbon cartridge is empty. If the ribbon cartridge is empty or if it is removed, the printer will enter the Pause mode, and the front panel indicators will indicate that operator attention is required.

FRONT PANEL INDICATORS AND CONTROLS

Ready Lamp

When illuminated, the Ready lamp indicates that the printer is operational. When the Ready lamp is off and the Attend lamp is on, the printer is in a fault condition called Check and technical assistance is required. The Ready lamp blinks when the printer is in the Pause mode. The printer enters the Pause mode when the PAUSE switch is pressed or when operator attention is required (ribbon out, paper out, cover open).

An audible alarm sounds whenever operator attention is required. It also sounds when a communications error has been detected or when the printer has gone into the Check condition (see ERROR CONDITIONS for details).

Attend Lamp

The Attend lamp is off when the printer is operating normally. It is lit only when operator attention is required or when the printer is in the Check condition. Table 2 summarizes all possible indicator lamp conditions.

Table 2. Front Panel Indicator Lamps

CONDITION	READY LAMP	ATTEND LAMP
Normal printer operation	ON	OFF
Pause switch depressed or operator attention required: ribbon out, paper out, cover off	BLINKS	ON
Pause switch pressed	BLINKS	OFF
Printer in Check	OFF	ON

Procedures for identifying and correcting error conditions indicated by the Ready and Attend lamps are provided under ERROR CONDITIONS.

Form Feed Switch

To obtain a form feed, that is, to vertically advance paper a preset number of inches to the top of the next form, simply press the Form Feed membrane switch when the printer is ON. An audible alarm will sound briefly when the switch is correctly pressed. Form Feed length is determined by the setting of the printer configuration switches located on the back of the front panel.

You may also use the Form Feed switch to initiate the printer's self-test routine. This test produces a continuous swirl or "barber-pole" pattern of all the characters on the printwheel. The test may be used to check individual character printing, print quality, and general printer operation. Refer to the INSTALLATION AND TESTING section of the manual for details.

Pause Switch

This switch is used to stop printing and other printer actions temporarily. Pressing the switch will stop the carriage at the last printed character position. When the Pause switch is pressed a second time, printing will resume with no loss of data. This switch is typically used when ribbons, printwheels, or paper must be replaced. Note that following the correction of an operator error condition (e.g., ribbon out, paper out, cover open), the PAUSE switch must be pressed once before printing can continue. The PAUSE switch is also used to initiate Terminal Self-Test (see RUNNING THE SELF-TEST in your QUME CONNECTION Interface Manual for details).

Configuration Switches

To successfully communicate with the host system, the SPRINT 11 PLUS configuration switches (DIP) must be properly set. Typically, you set the configuration switches when you first connect the SPRINT 11 PLUS to your computer and only change the settings if a different operating mode is selected (e.g., replacing a WP printwheel with a WPS printwheel). The function of all DIP switches on the printer and on the interface is controlled by the QUME CONNECTION interface module. Although the printer DIP switch functions as described below are accurate for the Centronics and RS-232-C versions of the QUME CONNECTION, they do not apply to all QUME CONNECTION modules. Refer to your specific QUME CONNECTION interface manual for a description of printer DIP switch functions.

Two sets of four configuration DIP switches are mounted on the back of the front panel on the SPRINT 11 PLUS printer. An additional set of eight DIP switches is mounted on the rear panel. Figure 6 indicates the function and positioning of each of these switches. Note that in most cases whenever a switch is changed, the printer must be reset before the new setting is honored. Turning the printer power off and on will cause the new setting to be enabled. PITCH, AUTO LF, and 6 or 8 LINES/INCH are the only exceptions to this rule; the printer reads the status of these switches constantly. Remember that the QUME CONNECTION interface module also has a set of configuration switches. Refer to your interface manual to determine the proper positioning of these switches.

TWINTELLECT GERMAN WP

Twintellect electronically sets the printer to accept a special, nonstandard character sequence printwheel. When using standard WP and WPS type printwheels, place the switch in the TWINTELLECT OFF position. The TWINTELLECT position applies to the nonstandard printwheels that the printer is factory programmed to accept (Deutschland WP or Deutschland WPS). If the switch is in the incorrect position, the printer prints inaccurately.

AUTO BIDIRECTIONAL PRINTING
AUTO BIDIRECTIONAL PRINTING OFF

When AUTO BIDIRECTIONAL ON is selected, the printer will print in both directions, thus increasing print speed. Automatic bidirectional printing is totally a function of the SPRINT 11 PLUS; you do not need to preformat data.

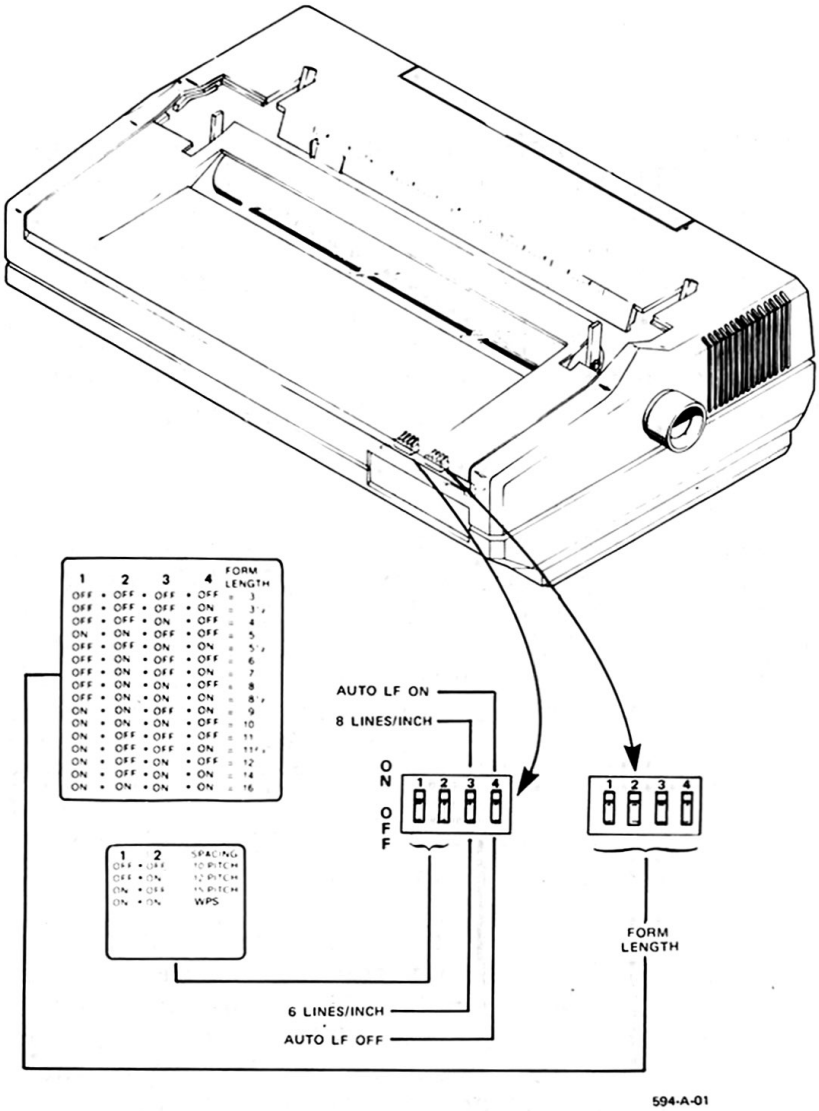

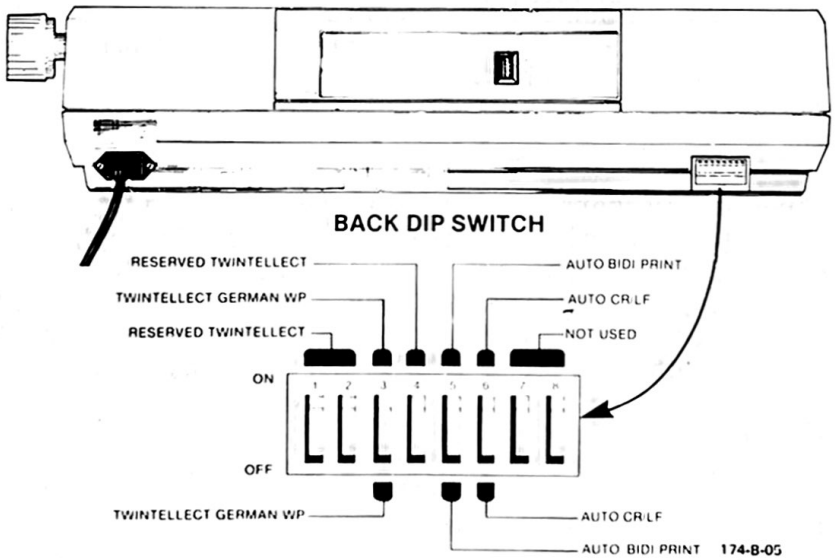

Figure 6. Configuration Switch Functions

AUTO CR/LF
AUTO CR/LF OFF

When AUTO CR/LF is selected, one automatic carriage return and one line feed are generated (regardless of the status of the AUTO LF switch) when the carriage reaches either the right margin or the right end of the platen. When NO AUTO CR/LF is selected, the carriage continues printing past the right margin to the end of the platen. It will remain there until a carriage return and/or a line feed is issued by the computer.

PITCH

These two switches set the printer to print in either one of the fixed pitch modes (WP - 10,12,15) or in the proportional spacing mode (WPS). The wrong combination of printwheel and pitch setting can result in a nonsensical or unattractive printout. To select the desired pitch mode, refer to Figure 6.

FORM LENGTH

These four switches determine the distance of vertical paper motion when the FORM FEED switch is depressed. Sixteen different form lengths are available.

AUTO LF
AUTO LF OFF

When some computers send a line of characters to the printer, they end the line with only a carriage return. Unless a line feed is also issued, the paper will not advance. When AUTO LF is selected, a line feed is automatically generated at each carriage return. This feature saves you the trouble of rewriting your printer software driver to send both a CR and LF at the end of a line. When NO AUTO LF is chosen, a return is generated and the carriage returns to the left margin, but it will remain on the same printing line. A separate LINE FEED command is required if a new printing line is desired.

8 LINES/INCH
6 LINES/INCH

This switch selects six or eight lines per inch vertical spacing. Six lines per inch is the most popular setting.

REAR CONNECTORS AND CONTROLS

Power Cord

One end of this cord plugs into the printer and the other end plugs into an AC receptacle. Be certain that the AC power source satisfies printer power requirements.

AC Line Fuse

This fuse protects the printer's circuitry in case of a power overload or internal failure. Refer to the BASIC MAINTENANCE Section for instructions detailing fuse replacement.

Power Switch

The AC power switch, shown in Figure 7, is located on the back of the printer. This switch turns the printer ON or OFF.

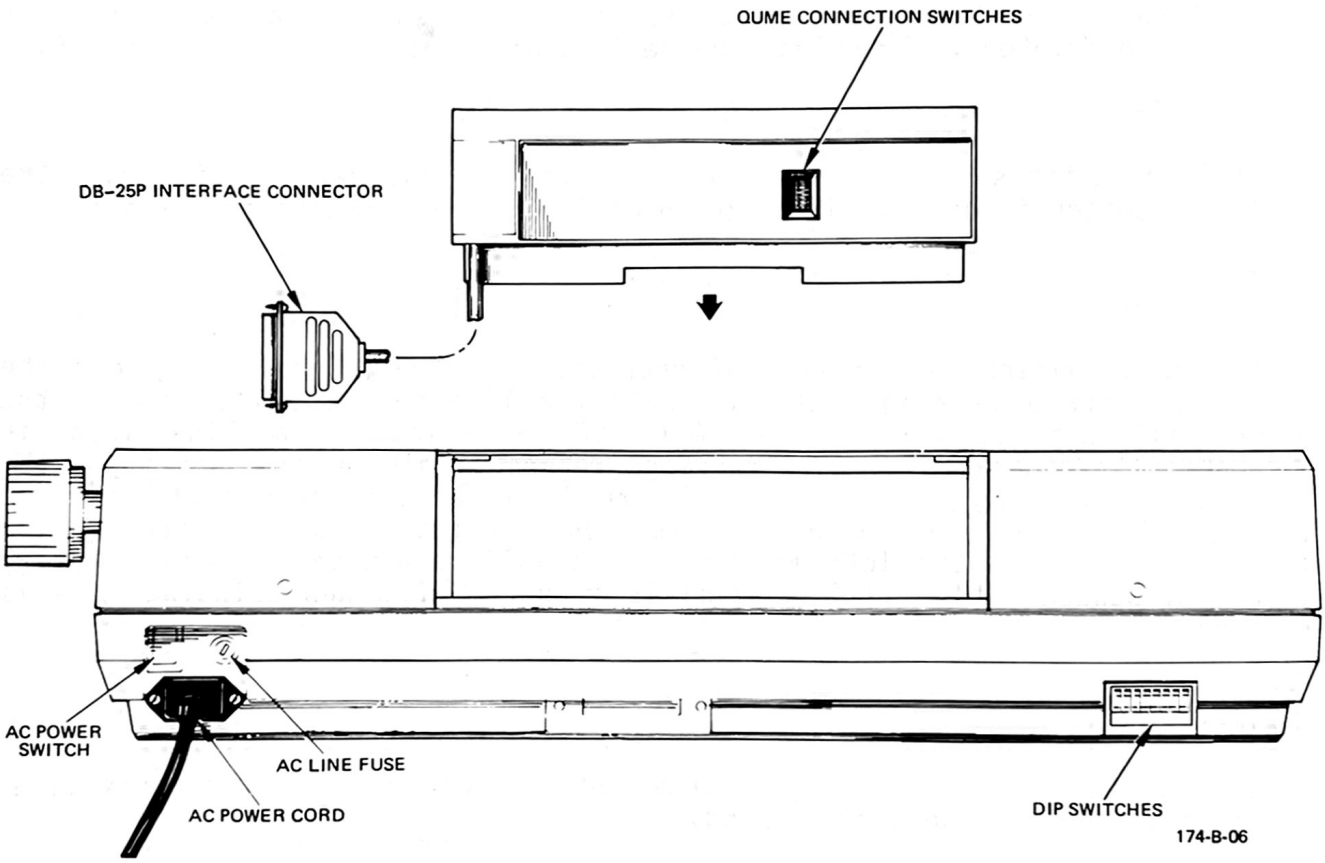

Figure 7. Rear Panel Connectors and Controls

INSTALLATION AND TESTING

To connect the SPRINT 11 PLUS printer to your computer, proceed as follows:

1. Install the appropriate QUME CONNECTION interface module (e.g., Centronics, RS-232-C, IEEE, etc.). The QUME CONNECTION module plugs into the 50-pin edge-board connector mounted on the back of the SPRINT 11 PLUS (see Figure 8).

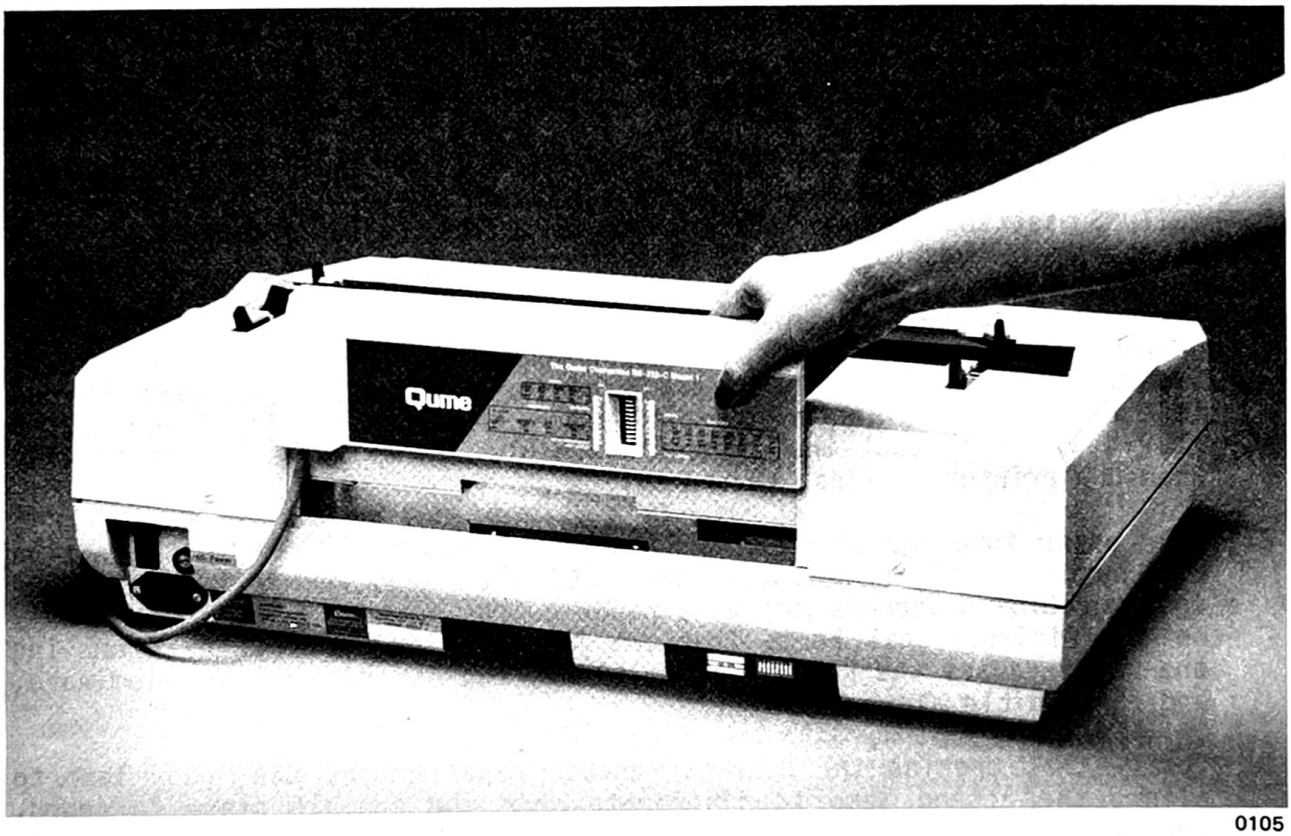

0105

Figure 8. Installing the QUME CONNECTION Interface Module

2. Connect the interface cable from the QUME CONNECTION interface module to your computer. Note that some computers (e.g., Commodore's PET and CBM units) require an additional cable to successfully mate with Qume's interface module connector. Those of you using the QUME CONNECTION RS-232-C Model 1 Interface module may need to use a sex changer or modem eliminator cable. Refer to your computer reference manual and to the QUME CONNECTION interface manual for details.

3. Set the printer's configuration switches as required for proper operation with your computer. Two sets of four configuration switches are located on the back of the front panel. An additional set of eight DIP switches is located on the rear panel of the printer. Labels describing the functions of these DIP switches are attached to the back of the removable operator access panel (see the Configuration Switches section of this manual for additional details). A third set of configuration switches is

located on the QUME CONNECTION interface module. Refer to the label on the module or to your QUME CONNECTION interface manual to determine the proper positioning of these switches. If either the printer or interface module switches are incorrectly set, the printer will not work properly or may not work at all.

4. Check that the printer's power requirements (refer to the label next to the printer's AC outlet) match the local power source. Plug the power cord into a grounded AC outlet. Failure to use the power cord's ground endangers both you and the printer.

INSPECTION TESTING

After connecting the SPRINT 11 PLUS to your computer (or to a specialized test system), install a printwheel and ribbon cartridge. See the OPERATING INSTRUCTIONS section if you are unfamiliar with these procedures. Then inspect the printer as follows:

1. Turn the power ON and verify that the printer correctly performs a power up restore sequence. During a restore sequence, the Ready lamp should be ON, the printwheel should rotate, and the carriage should move to the left side of the printer (your left when facing the front of the Sprint 11 Plus). Note that the printer's audible alarm always sounds briefly when the printer is first turned on.

2. Load paper into the printer (refer to the OPERATING INFORMATION section for paper loading instructions). If the STOP PRINT ON PAPER OUT configuration switch is on and a paper out detect sensor (available only on the Bidirectional Forms Tractor) is installed, verify that removing the paper causes the Ready lamp to blink, the Attend lamp to illuminate, and the audible alarm to sound.

3. Verify that opening the operator access panel causes the Ready lamp to blink, the Attend lamp to illuminate, and the audible alarm to sound. Verify that removing the ribbon cartridge causes the audible alarm to sound. With the ribbon cartridge removed, replace the operator access panel. Verify that the Ready lamp blinks and the Attend lamp illuminates, indicating an error condition.

4. Push the FORM FEED switch to verify that this results in a paper feed. An audible alarm should sound briefly when the switch is pressed. The amount of paper feed will depend on the FORM LENGTH configuration switch settings.

5. If desired, the printer's basic internal functions may be tested by performing the printer's Self-Test routine. A successful completion of the Self-Test indicates that the electrical and mechanical circuits in the printer are functioning properly. A thorough description of Self-Test is presented in the following section.

6. Exercise the printer by having your computer (or test) system transmit average English text, a listing, or specialized test patterns (See User Test Mode under the COMMAND SET discussion in your interface manual).

7. Verify that all commands have been executed correctly and that all characters have been printed with satisfactory print quality.

RUNNING THE SELF-TEST

The SPRINT 11 PLUS printer includes an internal diagnostic routine (Printer Self-Test) which tests the printer's basic electronic and mechanical functions. This Self-Test can be run even before the SPRINT 11 PLUS is connected to your computer system. A successful completion of Self-Test indicates that all the SPRINT 11 PLUS circuitry is functioning properly. Self-Test can be a valuable aid when you must isolate problems that may have originated from the SPRINT 11 PLUS, the QUME CONNECTION, or your computer system.

Printer Self-Test does not test the circuitry in the QUME CONNECTION interface module. However, many types of QUME CONNECTION interfaces (e.g., RS-232-C, Centronics, IEEE) support a Terminal Self Test, initiated via the PAUSE switch, in which the circuitry of the interface module is also tested. Refer to your QUME CONNECTION interface manual for details.

Before starting the Self-Test, install a good ribbon, a WP printwheel, and paper in the printer. (The paper should be at least 9 and 1/2 inches wide.) Then proceed as follows:

1. Power-down the printer.
2. Firmly press and hold down the Form Feed Switch.
3. Power-up the printer.
4. Release the Form Feed Switch when the printout begins. Figure 9 illustrates a typical printout.

```
.&'()*+,-./0123456789:;<=>?@ABCDEFGHIJKLMNOPQRSTUVWXYZ[⊗]⊙ ⊽abcdefghijklmnopqrstuvwxyz§¶†¯_T!"#$%
:'()*+,-./0123456789:;<=>?@ABCDEFGHIJKLMNOPQRSTUVWXYZ[⊗]⊙ ⊽abcdefghijklmnopqrstuvwxyz§¶†¯_T!"#$%&
()*+,-./0123456789:;<=>?@ABCDEFGHIJKLMNOPQRSTUVWXYZ[⊗]⊙ ⊽abcdefghijklmnopqrstuvwxyz§¶†¯_T!"#$%&'
)*+,-./0123456789:;<=>?@ABCDEFGHIJKLMNOPQRSTUVWXYZ[⊗]⊙ ⊽abcdefghijklmnopqrstuvwxyz§¶†¯_T!"#$%&'(
*+,-./0123456789:;<=>?@ABCDEFGHIJKLMNOPQRSTUVWXYZ[⊗]⊙ ⊽abcdefghijklmnopqrstuvwxyz§¶†¯_T!"#$%&'()
+,-./0123456789:;<=>?@ABCDEFGHIJKLMNOPQRSTUVWXYZ[⊗]⊙ ⊽abcdefghijklmnopqrstuvwxyz§¶†¯_T!"#$%&'()*
,-./0123456789:;<=>?@ABCDEFGHIJKLMNOPQRSTUVWXYZ[⊗]⊙ ⊽abcdefghijklmnopqrstuvwxyz§¶†¯_T!"#$%&'()*+
-./0123456789:;<=>?@ABCDEFGHIJKLMNOPQRSTUVWXYZ[⊗]⊙ ⊽abcdefghijklmnopqrstuvwxyz§¶†¯_T!"#$%&'()*+,
./0123456789:;<=>?@ABCDEFGHIJKLMNOPQRSTUVWXYZ[⊗]⊙ ⊽abcdefghijklmnopqrstuvwxyz§¶†¯_T!"#$%&'()*+,-
/0123456789:;<=>?@ABCDEFGHIJKLMNOPQRSTUVWXYZ[⊗]⊙ ⊽abcdefghijklmnopqrstuvwxyz§¶†¯_T!"#$%&'()*+,-.
0123456789:;<=>?@ABCDEFGHIJKLMNOPQRSTUVWXYZ[⊗]⊙ ⊽abcdefghijklmnopqrstuvwxyz§¶†¯_T!"#$%&'()*+,-./
123456789:;<=>?@ABCDEFGHIJKLMNOPQRSTUVWXYZ[⊗]⊙ ⊽abcdefghijklmnopqrstuvwxyz§¶†¯_T!"#$%&'()*+,-./0
23456789:;<=>?@ABCDEFGHIJKLMNOPQRSTUVWXYZ[⊗]⊙ ⊽abcdefghijklmnopqrstuvwxyz§¶†¯_T!"#$%&'()*+,-./01
3456789:;<=>?@ABCDEFGHIJKLMNOPQRSTUVWXYZ[⊗]⊙ ⊽abcdefghijklmnopqrstuvwxyz§¶†¯_T!"#$%&'()*+,-./012
456789:;<=>?@ABCDEFGHIJKLMNOPQRSTUVWXYZ[⊗]⊙ ⊽abcdefghijklmnopqrstuvwxyz§¶†¯_T!"#$%&'()*+,-./0123
56789:;<=>?@ABCDEFGHIJKLMNOPQRSTUVWXYZ[⊗]⊙ ⊽abcdefghijklmnopqrstuvwxyz§¶†¯_T!"#$%&'()*+,-./01234
6789:;<=>?@ABCDEFGHIJKLMNOPQRSTUVWXYZ[⊗]⊙ ⊽abcdefghijklmnopqrstuvwxyz§¶†¯_T!"#$%&'()*+,-./012345
789:;<=>?@ABCDEFGHIJKLMNOPQRSTUVWXYZ[⊗]⊙ ⊽abcdefghijklmnopqrstuvwxyz§¶†¯_T!"#$%&'()*+,-./0123456
89:;<=>?@ABCDEFGHIJKLMNOPQRSTUVWXYZ[⊗]⊙ ⊽abcdefghijklmnopqrstuvwxyz§¶†¯_T!"#$%&'()*+,-./01234567
9:;<=>?@ABCDEFGHIJKLMNOPQRSTUVWXYZ[⊗]⊙ ⊽abcdefghijklmnopqrstuvwxyz§¶†¯_T!"#$%&'()*+,-./012345678
:;<=>?@ABCDEFGHIJKLMNOPQRSTUVWXYZ[⊗]⊙ ⊽abcdefghijklmnopqrstuvwxyz§¶†¯_T!"#$%&'()*+,-./0123456789
;<=>?@ABCDEFGHIJKLMNOPQRSTUVWXYZ[⊗]⊙ ⊽abcdefghijklmnopqrstuvwxyz§¶†¯_T!"#$%&'()*+,-./0123456789:
<=>?@ABCDEFGHIJKLMNOPQRSTUVWXYZ[⊗]⊙ ⊽abcdefghijklmnopqrstuvwxyz§¶†¯_T!"#$%&'()*+,-./0123456789:;
=>?@ABCDEFGHIJKLMNOPQRSTUVWXYZ[⊗]⊙ ⊽abcdefghijklmnopqrstuvwxyz§¶†¯_T!"#$%&'()*+,-./0123456789:;<
>?@ABCDEFGHIJKLMNOPQRSTUVWXYZ[⊗]⊙ ⊽abcdefghijklmnopqrstuvwxyz§¶†¯_T!"#$%&'()*+,-./0123456789:;<=
?@ABCDEFGHIJKLMNOPQRSTUVWXYZ[⊗]⊙ ⊽abcdefghijklmnopqrstuvwxyz§¶†¯_T!"#$%&'()*+,-./0123456789:;<=>
@ABCDEFGHIJKLMNOPQRSTUVWXYZ[⊗]⊙ ⊽abcdefghijklmnopqrstuvwxyz§¶†¯_T!"#$%&'()*+,-./0123456789:;<=>?
ABCDEFGHIJKLMNOPQRSTUVWXYZ[⊗]⊙ ⊽abcdefghijklmnopqrstuvwxyz§¶†¯_T!"#$%&'()*+,-./0123456789:;<=>?@
BCDEFGHIJKLMNOPQRSTUVWXYZ[⊗]⊙ ⊽abcdefghijklmnopqrstuvwxyz§¶†¯_T!"#$%&'()*+,-./0123456789:;<=>?@A
CDEFGHIJKLMNOPQRSTUVWXYZ[⊗]⊙_⊽abcdefghijklmnopqrstuvwxyz§¶†¯_T!"#$%&'()*+,-./0123456789:;<=>?@AB
```

554-A

Figure 9. "Barber Pole" Printout from Printer Self-Test

5. To stop a Self-Test, simply power down the printer or depress and hold down the Form Feed Switch until the carriage reaches the end of the current print line.

When Self-Test is first started, the SPRINT 11 PLUS will perform an initialization sequence (the carriage will move to the left and the printwheel may turn). The printer will then begin continuously printing lines of all of the characters on the printwheel in a "barber pole" swirl as illustrated in Figure 9. Note that the barber pole printout will always be in 10 pitch. Also remember that a WP printwheel must be installed to run the printer Self-Test. If a WPS printwheel is in use, the wrong characters will be printed during Self-Test.

OPERATING INSTRUCTIONS

This section provides basic operator instructions for loading paper and installing/changing a printwheel and ribbon cartridge. All of these procedures can be performed easily and quickly if you follow the recommended instructions.

LOADING PAPER

Paper is loaded by hand in much the same way as it is in most office typewriters. The following steps describe standard single sheet paper feed:

1. Pull the paper bail toward you.

2. With the paper release lever to the rear, place the paper behind the platen.

3. Rotate the platen, bringing the paper around the platen and past the paper bail.

4. Pull the paper release lever forward and straighten the paper if necessary.

5. Ensure that the left edge of the paper is inside the paper out detect sensor (if one has been installed on the printer with a bidirectional forms tractor or mechanical sheet feeder). The printer will not work, the READY lamp will blink, and the ATTEND lamp will be illuminated if the paper is not correctly in the paper out sensor and the STOP PRINT ON PAPER OUT configuration switch is ON.

6. Place the paper bail back against the platen.

USING THE CARD GUIDE TO POSITION PAPER

The two top red horizontal lines and the red center vertical line on your printer's card guide can be used to help position paper. To position paper

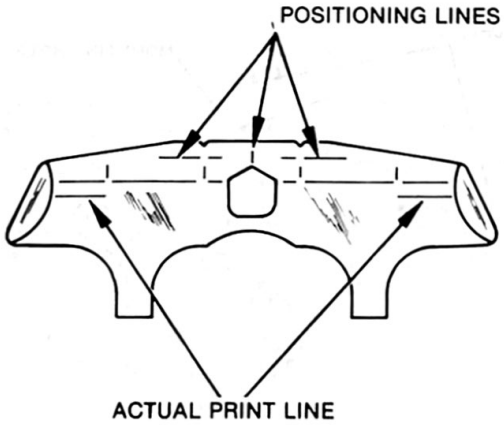

237-A-01

Figure 10. Using the Card Guide to Position Paper

vertically, align the desired print line with the two top positioning lines on the card guide. Then carefully roll the platen downward 12 small "steps." This will automatically set the form at the actual print line. Move the form left to right (pull the paper release lever forward) as required to position it horizontally using the center red positioning line as a reference.

CHANGING A RIBBON CARTRIDGE

To change a ribbon cartridge:

1. Open the operator access panel as described in the PRODUCT DESCRIPTION section.

2. Push down on the ribbon cartridge holding latches and lift up the used

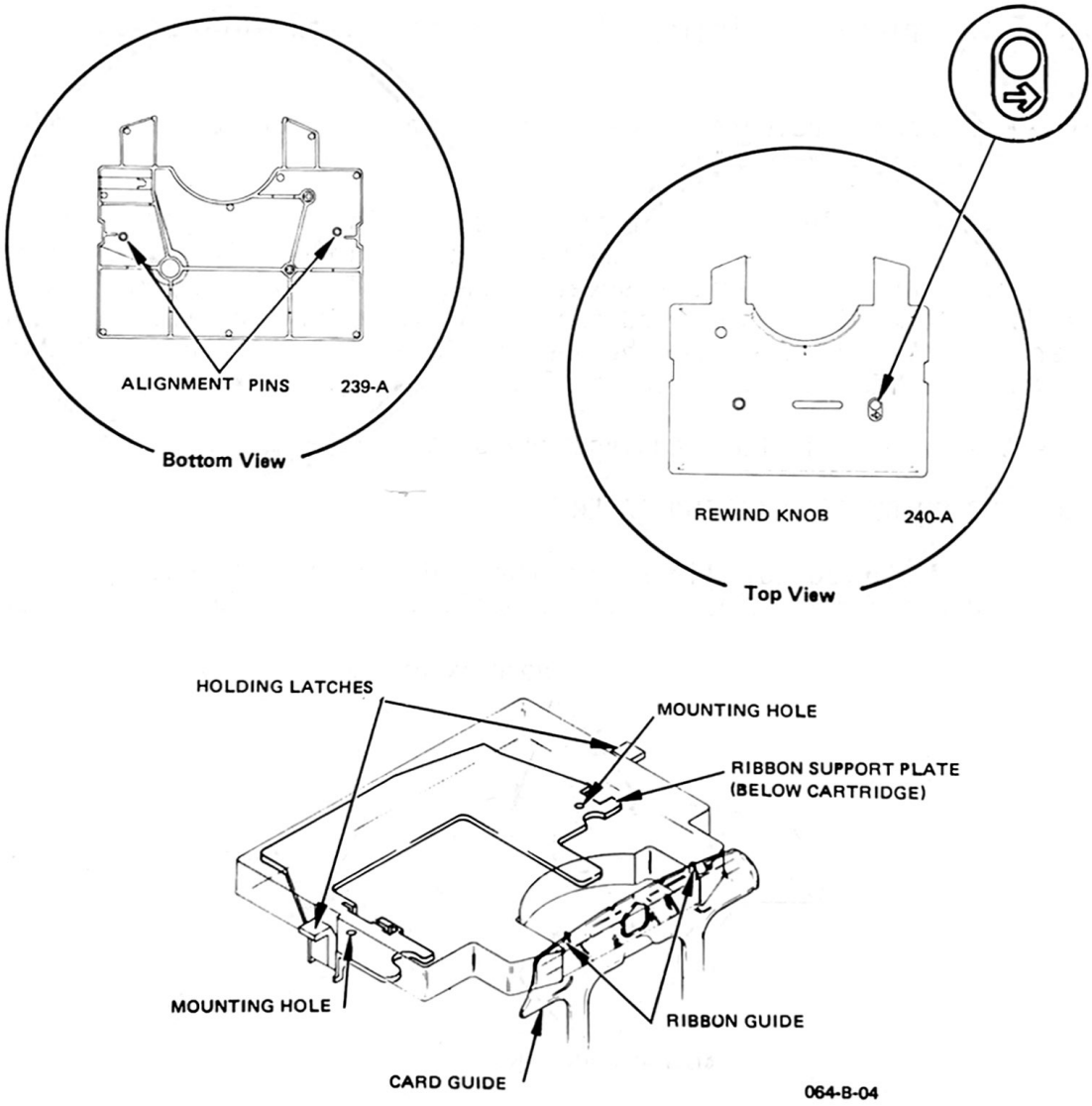

Figure 11. Changing a Ribbon Cartridge

ribbon cartridge. The printer will hold the carriage in place while the ribbon is being changed.

3. To install the new ribbon, take up any slack from the replacement ribbon cartridge by turning the rewind knob on the top of the cartridge in the direction indicated.

4. Place the replacement cartridge onto the ribbon support plate, front first, so that the ribbon will run between the guides and the clear plastic card guide. Then position it securely between the latches and push it down. It will be held down by the latches.

NOTE

Ensure that the alignment pins on the bottom of the ribbon cartridge are inserted into the mounting holes on the ribbon support plate.

5. Make sure the ribbon is taut, not tangled, and is placed in front of the printwheel (between the printwheel and the paper).

6. Close the operator access panel. The Ready lamp will blink, the Attend lamp will be illuminated, and the printer will not print unless the ribbon is correctly installed and the operator access panel is correctly closed. Once all is in order, press the PAUSE switch once to clear the Pause condition and resume normal printer operation.

7. If the ribbon supply runs out during printing, the printer will stop printing and enter the Pause mode. Characters sent from your computer, however, will continue to be received and stored in the printer's buffer. When the buffer is nearly full, the printer will instruct the computer to stop transmitting data. When a new ribbon is installed and the operator access panel is closed, the Attention light will go off but the Ready light will remain blinking. Press the PAUSE switch to clear the Pause condition. Printing then continues with no loss of characters.

CHANGING A PRINTWHEEL

To change a printwheel:

1. Open the operator access panel.

2. Remove the ribbon cartridge (see CHANGING A RIBBON CARTRIDGE procedure).

3. Squeeze the metallic release lever (see Figure 12, Changing a Printwheel) towards the left and gently tilt the printwheel assembly toward you as far as it will go. Do not pull on the hammer assembly.

4. Grasp the rubber printwheel hub firmly and pull upward. The printwheel should slide off. If it does not, wiggle the printwheel hub from side to side while pulling. Never pull on the spokes.

5. Examine the printwheel for ink or dirt buildup and clean if necessary (see the BASIC MAINTENANCE discussion for cleaning instructions). Replace badly worn or damaged printwheels.

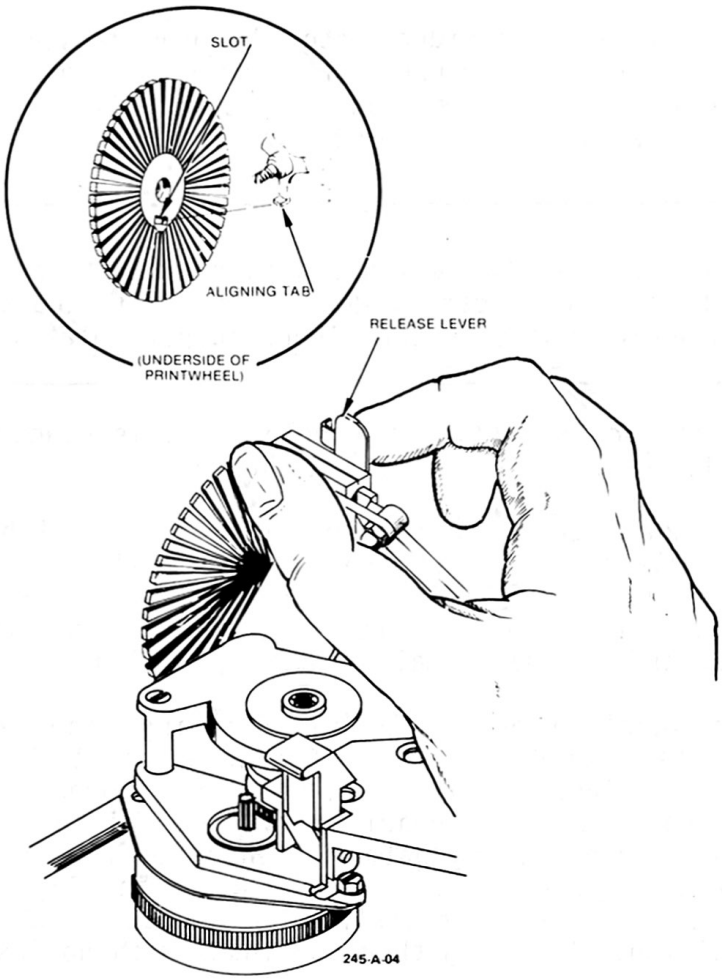

Figure 12. Changing a Printwheel

6. To install a printwheel, position the slot in the printwheel over the aligning tab on the printwheel motor hub. Press down firmly.

NOTE

The SPRINT 11 PLUS can accomodate either fixed pitch printwheels (WP type) or proportional printwheels (WPS type). However, a configuration switch must be set to match the type of printwheel used. Refer to the Configuration Switches section for details.

7. Being careful not to push on the hammer assembly itself, squeeze the release lever and gently tilt the printwheel assembly back into the normal printing position. Ensure that the release lever snaps into place.

8. Replace the ribbon cartridge, and close the operator access panel. The Ready lamp will blink and the Attend lamp will be illuminated unless the ribbon is correctly installed and the operator access panel is correctly closed.

9. Once the Attend lamp turns off, press the PAUSE switch to resume normal printer operation.

BASIC MAINTENANCE

CLEANING PROCEDURES

All printers gradually accumulate paper fibers, ink, and dust. To maintain trouble-free operation and superior print quality, perform the periodic cleaning procedures outlined in this section.

Periodically check and clean the printwheel, the platen, the plastic card guide, and internal surfaces such as the cradle and the bottom pan of the printer.

Always disconnect power from the printer when performing any maintenance procedure.

CAUTION

Never spray cleaners directly into the printer; use only the methods outlined below.

Cleaning the Printwheel

If a fabric ribbon is used, a complete and thorough cleaning of the printwheel may be required periodically. The recommended cleaning solution is a light-bodied, noncaustic cleaner such as Formula 409tm or Fantastiktm. Do not use petroleum base solvents, chlorinated hydrocarbons (Trichlorethylene, etc.), or solutions that leave a powdery residue.

CAUTION

The printwheel cleaning procedure can splatter ink on clothing and surrounding objects. Take the necessary precautions to avoid soiling clothing or other objects.

Open the Operator Access Panel and remove the printwheel (see the section CHANGING A PRINTWHEEL). Clean the printwheel as follows:

1. Place the printwheel in a shallow dish or container.
2. Pour the cleaner into the container until the printwheel is barely covered.
3. Soak the printwheel for a minute or two.
4. Remove any caked-on areas that have not dissolved with a type cleaning brush or a medium stiffness toothbrush.
5. When the printwheel is clean, carefully pat it dry with absorbent cloth or paper towel.

6. Reinstall the printwheel in the printer.

7. Reinstall the Operator Access Panel.

NOTE

Between cleanings, periodically remove the printwheel and brush away loose paper fibers with a moderately soft brush.

Cleaning the Platen

Every few months (or more often, if necessary) remove and clean the platen. The recommended cleaner for the platen is Fedron or an equivalent product. Do not use other solvents such as white gasoline, alcohol, or laquer thinner. These products will clean the platen, but they will also harden the cushion's rubber surface and ultimately ruin the platen.

CAUTION

Fedron will attack paint and plastic parts. Do not use Fedron on any part of the printer except the platen, paper bail rollers, and feed rollers. Before cleaning the platen, remove it from the printer. Fedron is flammable; read and follow all precautions and warnings on the container.

Follow these instructions when removing the platen from the printer:

1. Open the Operator Access Panel.

2. Unsnap and remove the left and right cover inserts.

3. Remove the platen knob by pulling it from the platen shaft.

4. Pull the paper bail forward.

5. Pull the paper release lever forward.

6. Note how the grooved platen sleeve fits into the right printer side frame (see Figure 13).

7. Position your hands as illustrated in Figure 14. With your index fingers, depress the platen release latches just inside both printer side frames.

8. Once the platen is free from the release latches, angle it as shown in Figure 15. Positioned in this fashion, the platen is easily maneuvered to the left and out of the printer. Once removed, the platen should be placed on a flat surface. Take care not to drop it and never stand it on end.

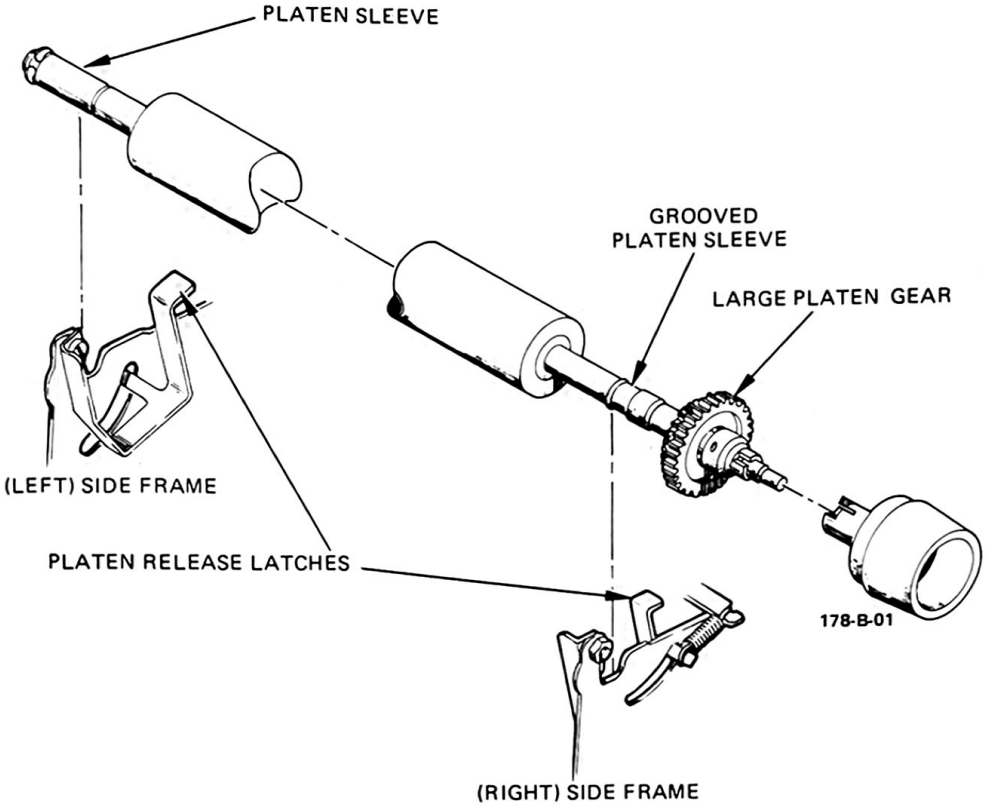

Figure 13. Platen and Side Frame Components

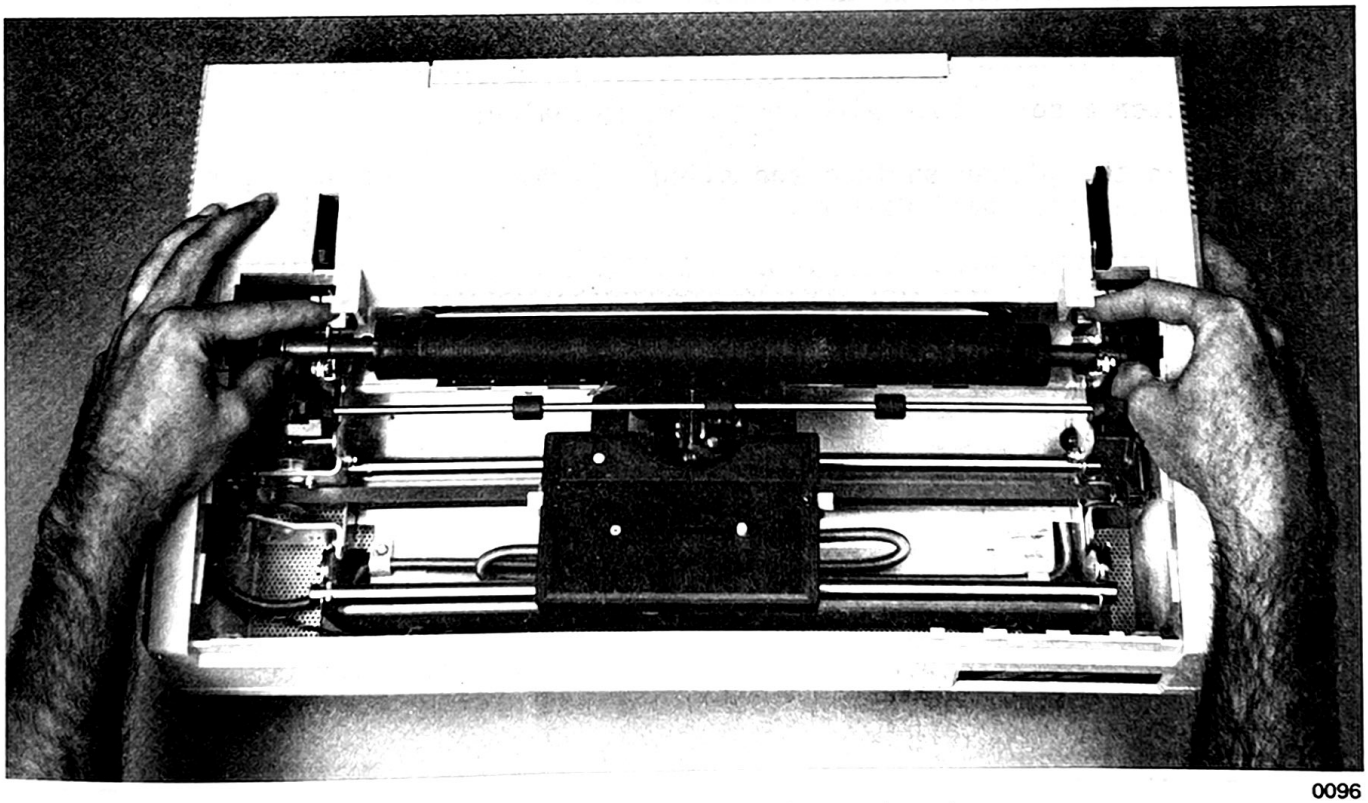

0096

Figure 14. Releasing the Platen Latches

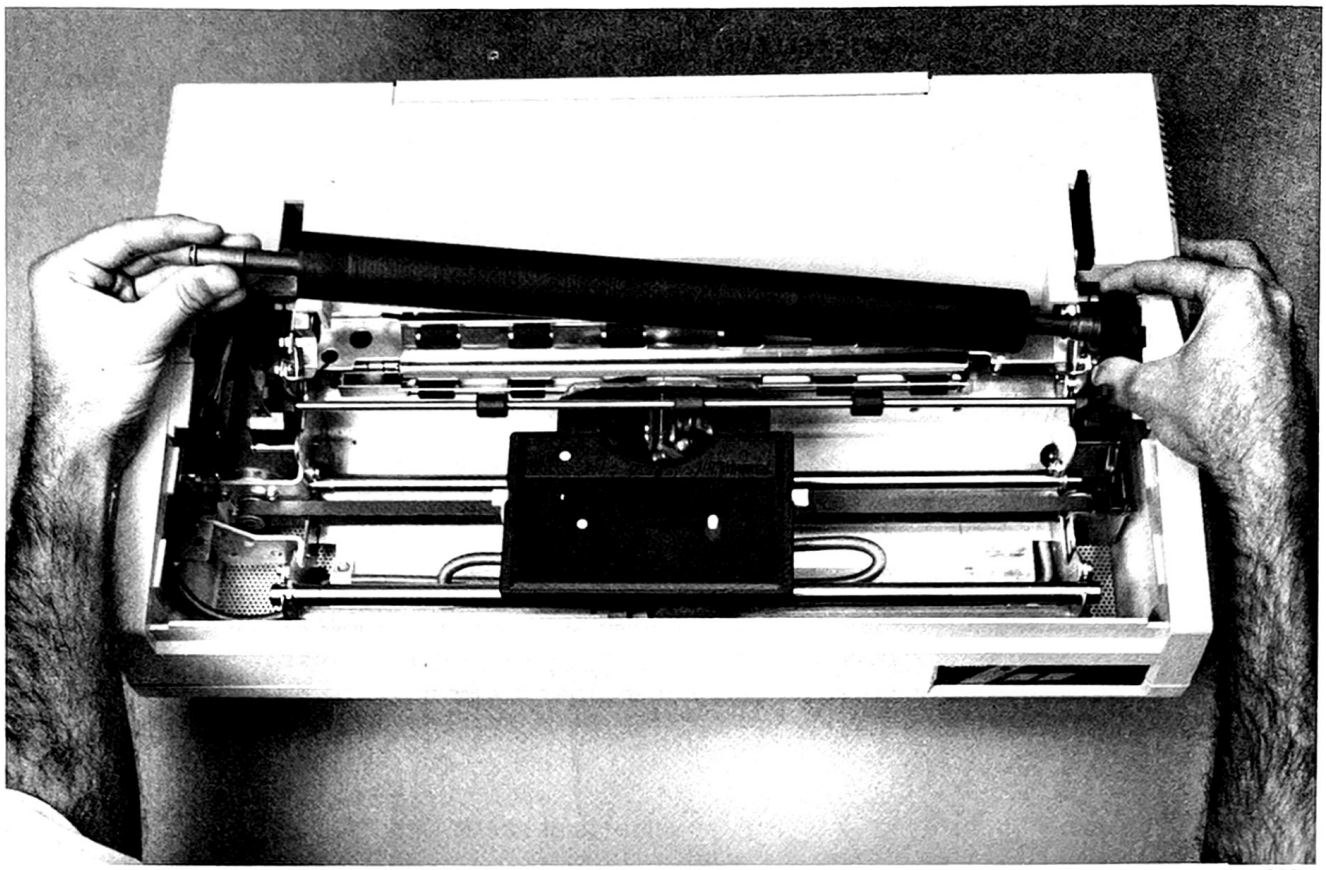

0097

Figure 15. Removing the Platen

Clean the platen as follows:

1. Moisten a soft cloth with Fedron or equivalent.

2. Clean the platen surface and allow to dry. Also clean the feed rollers and the paper bail rollers.

3. Complete the other cleaning procedures (internal surfaces and plastic card guide) outlined in this section before reinstalling the platen.

To reinstall the platen:

1. Gently maneuver the platen into the printer so that the grooved platen sleeve correctly aligns with the right printer side frame.

2. With your index fingers, depress the platen release latches, and push the platen into position with your thumbs. Reinstall the platen knob on the platen shaft.

3. The large platen gear should mesh with the idler gear below and behind it. Rotate the platen knob to ensure that the platen has been installed properly.

4. Set the paper bail back against the platen.

5. Reinstall the Operator Access Panel.

Cleaning the Plastic Card Guide

Ink particles from the ribbon will accumulate on the plastic card guide, obstructing your view of the printed page. While the ribbon, printwheel, and platen are removed, clean the card guide with a soft cloth or tissue using a mild soap; do not use solvents. It is not necessary to remove the card guide for cleaning.

Cleaning Internal Surfaces

While the platen is removed, clean the surrounding surfaces with a mild cleaning solution on a lint-free soft cloth. Do not use solvents; never spray cleaner into the printer.

1. The cradle is the curved metal "tray" that is exposed when the platen is removed. The cradle helps assure smooth passage of paper through the platen. Use a clean, dry cloth or brush to remove paper fibers, dust, or accumulated grime from the cradle. More stubborn grime on the cradle requires the attention of trained service personnel for removal and cleaning. Use Fedron to remove dirt, fibers, dust, and ink from the feed rollers and paper bail rollers.

2. Vacuum the bottom pan of the printer, if required. Remove the AC power cord to the printer if vacuuming.

3. If necessary, any of the metal parts can be cleaned with a safe degreasing solvent such as isopropyl alcohol.

4. Reinstall the platen, printwheel, and ribbon cartridge.

5. Reinstall the Operator Access Panel.

HELPFUL HINTS TO MAINTAIN GOOD PRINT QUALITY

You bought a daisy wheel printer because you were concerned with print quality. The following suggestions, if conscientiously applied, will help you maintain excellent print quality.

1. After receiving your SPRINT 11 PLUS, keep a sample of some early printouts. Use these to help determine when the print quality is deviating from your desired standards.

2. Select the right paper for the job and ensure that the paper is always positioned correctly in the platen.

3. Store your supplies properly. When not in use, printwheels should be stored in their containers and kept out of direct sunlight.

Store ribbon cartridges in a standard office environment. Areas that are too hot, too cold, or too humid can dry out ribbon ink or cause other ribbon damage.

4. Replace worn or damaged printwheels.

5. Perform the basic maintenance procedures listed in this section.

With a well maintained printer, fresh carbon ribbon, and high quality bond paper, the SPRINT 11 PLUS will consistently produce the finest print quality possible.

PRACTICES TO AVOID

Read the following guidelines carefully to help prevent possible damage to the printer or harm to the user:

1. Do not place liquids, paper clips, or other small objects on top of the printer.

2. Do not pull paper against the card guide. Use the paper release lever or FORM FEED switch or manually rotate the platen knob to remove paper from the printer.

3. Do not stand the platen upright on its knob after removing it from the printer. Do not place it where it might roll off and be damaged. A damaged platen causes reduced print quality.

4. Do not place clothing, jewelry, or hands near the printer mechanism while the unit is printing or in the Ready condition.

5. Avoid handling printwheels by the spokes. Printwheels should be handled by the hub only.

6. Do not insert stapled forms into the printer. They may mar the surface, damage the printwheel or platen, or prevent proper paper feeding. Also, do not write on or scratch the platen surface.

7. Do not leave the printer, ribbon, or printwheel in direct sunlight.

8. Never pick the printer up by the platen knob; it is not a handle.

IF YOU HAVE TROUBLE

This operator level troubleshooting guide can help you resolve problems before calling in a service representative. Potential problems are organized into two groups: Printer Problems and Print Quality Problems.

Printer Problems

If the printer should stop printing for no apparent reason, or if it just doesn't work, check for the following conditions:

Does the printer have power? The Ready or Attend lamp should be ON and the fan inside the printer should run when the power switch is turned on. If neither the Ready nor the Attend lamp is lit, check

the AC line cord connection or the AC power switch. Try another electrical appliance in the same receptacle to verify power at the source. Also, check for a possible bad fuse (see Replacing the AC Line Fuse).

Is the operator access panel open? The printer will be disabled when the operator access panel is open or improperly installed. Open and close the operator access panel if there is doubt. The Ready lamp will blink and the Attend lamp will be on if the panel is open.

Is there paper in the printer? Printers equipped with a Bidirectional Forms Tractor or Sheet Feeder and an out of paper sensor are disabled when there is no paper installed and the STOP PRINT ON PAPER OUT switch is ON. Under these conditions, the Ready lamp will blink and the Attend lamp will be ON if paper is not correctly installed.

Is the carbon ribbon cartridge empty? The printer will not print in this condition. Is the ribbon properly installed and located between the printwheel and paper? The Ready lamp will blink and the Attend lamp will be illuminated if the ribbon cartridge is not correctly installed or is empty.

If the printer has power, paper and ribbon are installed, the operator access panel is correctly installed, but the Ready lamp is off and the Attend lamp is on, the printer may have detected an internal fault. Watch the carriage and printwheel through the operator access panel window when you first turn on the printer power. A correctly operating printer performs an initialization sequence when power is applied. The carriage should move to the left side of the printer frame and the printwheel may rotate once. If the printer does not respond when you turn on the power and the Ready lamp is off and the Attend lamp is ON, there is an internal problem in the printer.

Is the printwheel firmly in place? With the printer turned OFF, manually rotate the printwheel and check for interference.

Make sure all cables are properly attached and have not been damaged.

Turn the printer OFF, remove the AC power cord, and look for any foreign matter (paper clips, staples, etc.) inside the printer which might interfere with the operation of the printer. Slide the carriage back and forth and check for freedom of motion.

Perform a Self-Test. A satisfactory completion of this test indicates that the problem may exist outside of the printer (See Running the Self-Test for a detailed description of Self-Test procedures).

If all else fails, call a service representative or return the unit to your dealer. Do not attempt to repair or lubricate the printer; the service representative will do that for you.

Print Quality Problems

1. If the spacing of the characters is very poor, check these things:

   If used, the forms tractor may be improperly installed or adjusted and may be allowing the paper to shift about.

   The printwheel may be worn or warped; try a new one.

   Check the pitch configuration switches located on the back of the front panel. The pitch setting should match that of the printwheel for proper spacing.

2. If the characters are not consistently dark, not sharp, or have spaces and voids in them, check the following:

   The Multicopy Select Lever may be incorrectly set. For single sheet forms place the lever in the forward position (toward you).

   The printwheel may be worn or have broken characters; try a new one.

   The ribbon may be old, dried out, not advancing properly, or scratched; try a new one.

   The platen may be damaged or excessively worn.

3. If the top or bottom part of the characters is missing, check these things:

   The ribbon may be folded over or not correctly installed.

   There may be interference between the ribbon and the card guide.

4. If the ribbon is jamming or not feeding correctly, check these things:

   The ribbon may be improperly installed.

   The ribbon may be winding incorrectly because the rewind knob was turned in the wrong direction. Wind any excess ribbon by turning the rewind knob in the direction indicated on the cartridge. Replace the cartridge if necessary.

5. If the ribbon is breaking or tearing, check these things:

   The ribbon may have jammed. Continued tension may cause the ribbon to break.

   Characters may have cut through the ribbon. This may be caused by an excessively worn platen that is not properly cushioning the paper surface. This may also be caused by improperly setting the Multicopy Select Lever.

6. If the print line is skewed or slanted, check these things:

   Check for an improperly installed or bent paper cradle underneath the platen.

   Check for proper paper loading if using a forms tractor.

   Check that the Paper Release Lever is set to the rear position (pushed away from you) if using the friction platen.

REPLACING THE AC LINE FUSE

Replace the AC line fuse as follows:

1. Turn the printer power off and unplug the AC power cord.

2. Remove the fuse housing on the rear of the printer with a screw driver by turning counterclockwise.

3. The AC line fuse must be replaced with a replacement fuse of the proper rating. All printers configured to run at 115 Vdc require a 5 amp, 3 AG/250 V fuse. Printers that run at 220/240 Vdc require a 3 amp fuse.

4. Install the fuse in the housing and reinstall the housing on the printer.

5. Reconnect the AC power cord and try the printer. If the new fuse blows, there is a problem with the printer. Call for technical assistance.

ERROR CONDITIONS

The Qume SPRINT 11 PLUS printer is designed to notify both you and your computer of certain error conditions. This section discusses the types of faults that can be detected and the manner in which the printer reacts to these conditions.

Ribbon Out

When the ribbon supply is exhausted or the ribbon cartridge is removed, (1) the Ready lamp will blink, (2) the Attend lamp will be illuminated (3) the audible alarm will be sounded, (4) all command execution will be stopped, and (5) the STATUS REPLY command bit 3 will be set. Please note that the ability of the SPRINT 11 PLUS to process a STATUS REQUEST command depends upon the type of QUME CONNECTION installed. See your QUME CONNECTION interface manual for details.

Paper Out

If the optional paper out detect sensor is installed on the Bidirectional Forms Tractor or Sheet Feeder and the STOP PRINT ON PAPER OUT configuration switch is ON, running out of paper will (1) blink the READY lamp, (2) illuminate the Attend lamp, (3) sound the audible alarm, (4) stop all command execution, and (5) set bit 3 in the STATUS REPLY.

Cover Open

When the operator access cover is opened, or the top cover is removed, (1) the Ready lamp will blink, (2) the Attend lamp will be illuminated, (3) the audible alarm will be sounded, (4) all command execution will be stopped, and (5) bit 3 of the STATUS REPLY will be set.

Check Condition

When the printer detects an internal fault condition, it enters a protective mode which disables the carriage, printwheel, and hammer circuits. This error condition, called Check, is a safety measure designed to prevent internal electronic or electromechanical damage.

There are several reliable methods by which you can identify a Check condition. First look at the printer's front panel indicators. The Ready lamp will be off, the Attend lamp will be on, and the audible alarm will sound momentarily when the printer goes into Check. A Check condition can also be identified by what appears to be a total loss of power to the electro-mechanical assemblies. If the printer's fan is running and you can freely slide the carriage back and forth, the printer is in Check.

The printer is not in Check when the operator access panel is open, the ribbon cartridge has been removed, or the optional paper out sensor detects paper out. Under such conditions the printer is in the PAUSE mode. The Ready light will be blinking and you will be unable to move the carriage with your hand. Replacing the cover and/or the ribbon cartridge and paper returns the printer to normal operation as soon as the PAUSE switch is pressed.

When the printer goes into Check, commands that have been temporarily stored in the printer's receive buffer are lost; all subsequent commands will be ignored except the INITIALIZE PRINTER and STATUS REQUEST (not supported by all Qume Connection interface modules) commands. Note that when the RS-232-C version of the QUME CONNECTION is installed, the SPRINT 11 PLUS sends the host system a 250 ms break and sets bit 4 in the STATUS REPLY whenever a Check condition occurs (see the QUME CONNECTION RS-232-C manual for details.

If you discover that your printer is indeed in Check, try to restore it to its normal operating condition by (1) turning the printer OFF and back ON or (2) by sending the INITIALIZE PRINTER command (ESC SUB I or ESC CR P) from your computer. If this fails to clear the Check condition, refer the problem to your service representative.

A NOTE ABOUT STATIC ELECTRICITY

The printer can withstand static electricity discharges that are normally found in the typical printer environment. Static electricity is generally not a problem in most areas and can usually be ignored. However, some of the new man-made fibers and materials that are used in clothing, carpets, shoes, etc. in very low humidity environments can cause unusually severe static discharges. Although these discharges are of extremely short duration, they

may measure many thousands of volts, causing momentary pain but no lasting damage to humans.

The printer can also be temporarily upset by particularly severe static discharge. If this happens, the printed output may be scrambled and unpredictable for a character or two, or possibly as much as an entire line. This temporary condition is self-clearing, and the printer will return to proper operation. Other unexplained errors can also be caused by such discharges.

If static discharge becomes a problem, some precautions can be taken to avoid the annoyance. If possible, raise the relative humidity of the environment to above 30%. During extremely dry conditions, avoid moving toward or brushing against the equipment when it is already working. Movement generates static electricity.

Treat the surrounding carpet or floor area with antistatic sprays usually available from carpet dealers or large department stores. These sprays generally require twice a week applications for the first few weeks, and once a month after that. In some cases, an antistatic mat may be desirable. These are available through industrial material suppliers.

SPECIFICATIONS

Print Speed

Print speed varies according to the model of the printer, the sequence of characters being printed, the amount and sequence of carriage and paper motions mixed with character printing, and the proper use of the various capabilities of the printer (high speed electronic tab, bidirectional printing, etc.).

The SPRINT 11 PLUS/40 has a maximum print speed of 40 characters per second. The SPRINT 11 PLUS/55 has a maximum print speed of 55 characters per second.

Print Generation

The SPRINT 11 PLUS printer prints full characters of electric typewriter quality in serial sequence. The print is generated by a ballistic hammer striking the back of an individual character. This impact forces the character face against a hard rubber platen. A carbon ribbon or an inked fabric ribbon between the character face and the platen prints a clear impression of the struck character on paper inserted around the platen.

The ballistic hammer force is microcomputer controlled to one of six intensities according to character size.

Printwheel

The set of 96 printing characters is arranged around a plastic "daisy" printwheel. Printwheels are easily operator changeable. Operator selectable fonts are available in 10, 12, and 15 pitch (characters per inch) and proportional spacing. A wide variety of standard font styles is available (see Qume Supplies Catalog 38012). Some nonstandard font styles (listed in Catalog 38012) may only be used when the Twintellect configuration switch is set or when special Twintellect tables have been downloaded to the printer (see the QUME CONNECTION Interface manual for details).

Ribbon

Operator replaceable plastic cartridge with black Multistrike IV carbon film or endless loop Fabric IV ribbon. End of ribbon detection standard. Ribbon advance is automatically proportional to the width of the printed characters.

Paper Feed/Platen

Friction platen, gear driven. The standard friction feed mechanism can accept one original and three copy sheets up to a total thickness of 0.025 inches.

Forms

Single sheets or continuous forms, with or without sprocket holes, may be used.

Maximum useable paper width is 15 inches (38.1 cm).

Sixteen operator selectable form length settings.

Format

Vertical and horizontal locations of each character are fully programmable within the following defined parameters:

HORIZONTAL

Bidirectional carriage motion in increments of 1/120 inch. Mode Switches select 10, 12, or 15 character per inch or WPS sequence proportional spacing.

132 columns at 10 characters per inch (cpi)
158 columns at 12 cpi
198 columns at 15 cpi
120 positions per inch

Slew rate of 21 inches/second (SPRINT 11 PLUS/40)
Slew rate of 30 inches/second (SPRINT 11 PLUS/55)

Electronic tabbing and carriage return of 13.1 inches maximum at 650 ms maximum (SPRINT 11 PLUS/40) and 450 ms maximum (SPRINT 11 PLUS/55).

Bidirectional carriage motions from 1/120 inch to 94/120 inch can be commanded by the host system.

VERTICAL

Operator selectable 6 or 8 lines per inch.

Slew rate of 2 inches per second (SPRINT 11 PLUS/40).
Slew rate of 3.5 inches per second (SPRINT 11 PLUS/55).

48 positions per inch, up or down, by external program commands, from 1/48 inch to 59/48 inch.

Plotting

Programmable graphics mode with resolution of up to 5760 points per square inch (1/120 inch horizontally; 1/48 inch vertically). Resolution of 17,280 points per square inch using the three periods (two offset vertically by 1/144 and 2/144 inch respectively) on Qume's Letter Gothic WPLOT printwheel (Qume Part Number 82189, available on special order).

Operator Controls

Paper Release lever, Multicopy Select lever, and an operator accessible ON/OFF AC power switch.

Front Panel: Form Feed switch, Pause switch, Ready lamp, and Attend lamp standard.

Communications Interface

Accomodates a wide variety of plug-in QUME CONNECTION interface modules.

Electrical

AC POWER REQUIREMENTS

Power supply selectable for 115 (95-132) or 230 (190-264) Vac, 49-63 Hz single phase, 150 watts.

Physical Dimensions And Weight

Height: 6.63" (16.84 cm)
Width: 23.22" (59.98 cm)
Depth: 14.34" (37.69 cm)
Weight: 37 lbs (16.65 kg)

Environment

TEMPERATURE

Operating: 50°F to 104°F (+10°C to +40°C)
Storage: -40°F to 169°F (-40°C to +60°C)
(Storage temperature specifications assume printer is stored in Qume shipping container)

HUMIDITY

Operating: 10% to 90% relative, noncondensing
Storage: 10% to 95% relative, noncondensing (when stored in Qume shipping container)

Vibration

Operating: 10 to 60 Hz, 0.5 g maximum
Storage: 10 to 300 Hz, 2.0 g maximum in shipping container

Noise Generation

63 dBA maximum (Sprint 11/40 Plus)
65 dBA maximum (Sprint 11/50 Plus)

Regulatory Agency Approvals

The Qume SPRINT 11 PLUS is designed to meet or equal the following agency specifications for EMI/RFI and safety:

FCC Rules & Regulations for Class A computing devices
UL 478;
CSA C22.2 No. 154;
VDE 0871-6/78, Level B;
IEC 380 (Comparable to ECMA 57 and VDE 0804/0805)

Reliability/Serviceability

MTBF at 25% duty cycle - 5,000 hours
MTTR 30 minutes

INDEX

PAGE

AC Line Fuse....14, 33
AC Power Requirements....13, 16, 31, 39
Access Cover Inserts....7
Accessories....2
Alarm....10, 16
Alignment Pins....21
Attend....10, 16
Auto Bidirectional Printing....11
Auto CR/LF....13
Auto Line Feed....13

Bidirectional Forms Tractor....2, 7, 9, 16
Buffer....21, 34

Card Guide....19, 29
Changing a Printwheel....21
Changing a Ribbon Cartridge....20
Check....10, 34
Cleaning....25
Communication Errors....10
Configuration Switches....11, 15, 22
Cradle....29

DIP Switches....11, 15

Environment....39
Error Conditions....33

FCC....2
Fedron....26
Form Feed....10, 16, 17
Form Length....13
Front Panel Indicators....9, 10

Initialization....18
Interface Cable....15
Interlock Switch....7

Loading Paper....19

Multicopy Select Lever....9
Multistrike IV....9

Operator Access Panel....7, 31
Operator Attention....10

PAGE

Paper Bail....9
Paper Centering Scale....9
Paper Edge Guide....9
Paper Handling System....2
Paper Out Detect Sensor....19
Paper Release Lever....9
Pause....9, 10, 11, 17, 21, 34
Physical Dimensions....39
Pitch....5, 13, 22
Platen....9, 26
Platen Knob....9
Plotting....38
Positioning Paper....19
Power Cord....13
Power Switch....14
Print Quality....10, 29, 32
Print Speed....37
Printer Drivers....13
Printer Self-Test....17
Printwheel....18, 37
Printwheels....4, 29
Proportional Spacing....5

Qume Connection....1, 15, 34

Ready....10, 16
Rear Connectors....13
Regulatory Agency Approvals....40
Reliability....40
Restore....16
Rewind Knob....21
Ribbon....20, 31, 37
Ribbon Out Sensor....9
Ribbons....3, 29

Self-Test....10, 16, 17
Sheet Feeder....3, 7, 16
Slew Rate....38
Spreadsheets....5
Static Electricity....34
Stop Print On Paper Out....16
Supplies....2

Terminal Self-Test....11
Twintellect....5, 11

Vertical Spacing....13

WPS....5

Sprint 11 Plus Manual
Reorder Number, 32026 December 1983

Qume
A Subsidiary of ITT

REQUEST FOR READER'S COMMENTS

Qume Corporation attempts to provide documents that meet the needs of all Qume product users. This form lets you participate directly in the documentation process.

Please restrict your comments to the usability, accuracy, readability, organization, and completeness of this document.

1. Please specify by page any errors you found in this manual.

_____

_____

_____

2. Does the document cover the information you expected or required? Please make suggestions for improvement.

_____

_____

_____

3. Is this the right type of document for your needs? Is it at the right level? What other types of documents are needed?

_____

_____

_____

4. Did you have any difficulty understanding descriptions or wording? Where?

_____

_____

_____

5. Please rate this document on a scale of 1 to 10 with 10 being the best rating _____

6. Dealer/Distributor where product purchased: _____

_____

_____

NAME _____ DATE _____
TITLE _____
COMPANY NAME/DEPARTMENT _____
ADDRESS _____
CITY _____ STATE _____ ZIP CODE _____

Please check here if you require a written reply.

WE'D LIKE YOUR COMMENTS . . .

This document is one of a series describing Qume products. Your comments on the back of this form will help us produce better manuals. Each reply will be carefully reviewed by the responsible person. All comments and suggestions become the property of Qume Corporation.

PLACE
POSTAGE
HERE

Qume Corporation
Attn: Technical Publications
2350 Qume Drive
San Jose, CA 95131