Printwheels and Ribbons

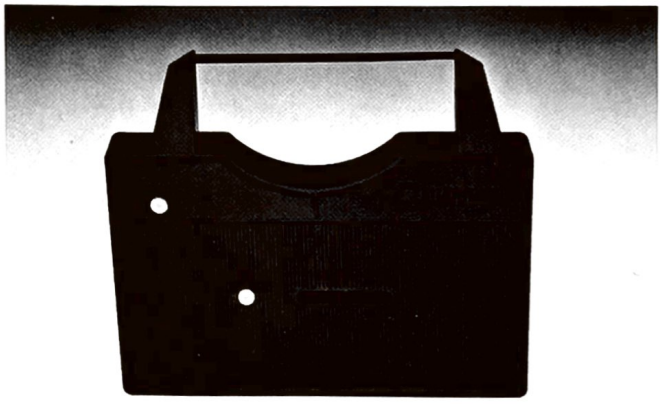

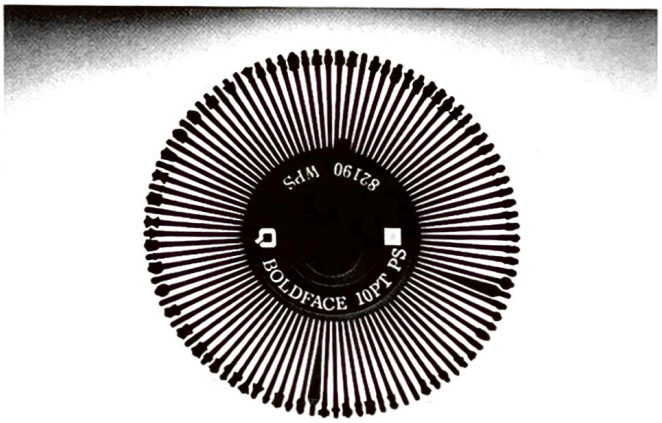

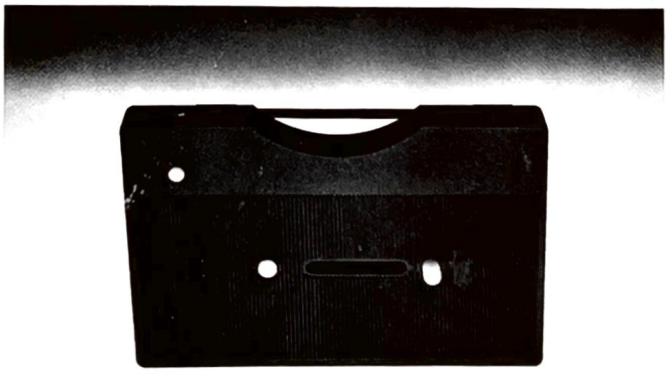

Qume®

We print under assumed names.

If you have a daisywheel printer, any daisywheel printer, it's probably a Qume at heart. Most of the leading suppliers of word processing systems today utilize printers manufactured by Qume.

What does it mean to you?

It means there is a whole world of typestyles and ribbons that will fit your printer. Making it a much better communicator than you ever thought possible.

The following pages contain the most comprehensive selection of plastic printwheels available anywhere for daisywheel printers. And to complement your typestyles, Qume offers the highest-quality ribbon cartridges. Qume Multistrike III™ for easy loading and 50% more characters, and the standard Multistrike II.™

Every printwheel and ribbon is specifically designed and manufactured by Qume for Qume printers. They give you the best assurance that the quality of your printing supplies will always match the quality of your printer.

How to select printwheels:

Typestyle
Typestyle describes the design of the characters. Popular typestyles are available in various pitches and sequences.

Pitch
Pitch defines the character size and spacing for which characters were originally designed. For example, 12 pitch means twelve characters are printed per linear inch.

Sequence
Sequence is a Qume shorthand way to describe the character set appearing on the printwheel, such as WP (Word Processing), Espana (Spanish), and so forth.

```
Prestige Elite

Prestige Elite is Qume's most popular
printwheel.  It is available in a greater
number of sequences than any other 12
pitch wheel and is the standard print-
wheel on many WP systems.

12 pitch:  WP, Bilingual, England,
           Sverige/Suomi, Danmark/Norge,
           France, Deutschland, Schweiz,
           España, Legal 2, ASCII 96,
           Nederland, Portugal
```

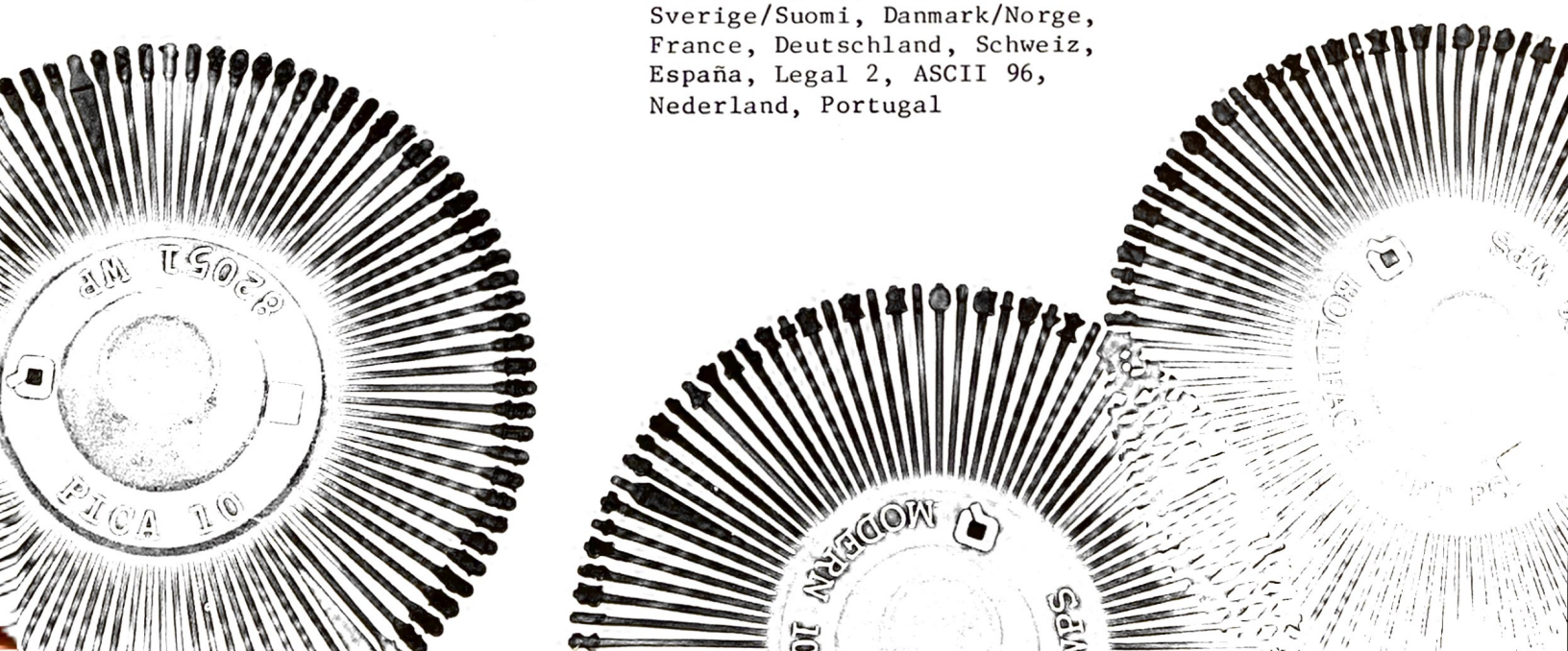

Qume Printwheels

Courier Italic

Courier Italic is recommended to add impact and emphasis to words, phrases and paragraphs.

12 pitch: WP

Greek/Math

The Greek/Math Symbol 2 printwheel is perfect for engineering, scientific, mathematic and technical applications.

12 pitch: Symbol 2

ORATOR 90%

ORATOR IS AN EXCELLENT TYPESTYLE FOR HEADINGS, TITLES, SPEECHES AND FOIL (TRANSPARENCY) TYPING.

10 PITCH: WP, ENGLAND

Prestige Pica

Prestige Pica is a taller, bolder and more formal version of Pica. It is frequently used in legal typing.

10 pitch: WP

Documentary

Documentary is a handsome typeface with large, clearly readable characters. Its use is limited to printers designed especially for it.

Proportional space : Commercial

Modern

The low cost of Qume Printwheels makes it easy to maintain a full library of typestyles.

Proportional space: WPS, Bilingual/WPS

OCR A

Qume means high quality. The excellent density and non-smear printing of Qume ribbons make a perfect impression.

10 pitch: ANSI

Theme 11 Pt.

Qume offers the greatest variety of typestyles and sequences, to assure that your special application needs can be met.

Proportional space: WP, Deutschland

Prestige Elite

Prestige Elite is Qume's most popular printwheel. It is available in many sequences and is often the standard printwheel on WP systems.

12 pitch: WP, WB, Bilingual, England, Sverige/Suomi, Danmark/Norge, France, Deutschland, Schweiz, España, Legal 2, ASCII 96, Nederland, Portugal

---

Pica

Pica is available in 15 sequences, many of them international. It is a popular face for word processing applications.

10 pitch: ESA, UKN, WP, Multi, UK, Deutschland, Sverige/ Suomi, England, Danmark/ Norge, France, Schweiz, Italia, Espana, Nederland, Portugal

Qume Printwheels

Letter Gothic

Qume's supplies distributors are located in the United States, Canada and Europe.

12 pitch: WP, ESA, UKN, A-N Symbol 1, Bilingual, Multi, Deutschland, Sverige/Suomi, Metric

---

Bookface Academic

Qume's printwheels provide longer life through precision engineering, specially developed materials and rigorous quality control standards.

10 pitch: AY, WP, Bilingual, Multi

OCR B

Qume is a technological winner! In materials, process and design Qume's name means excellence.

10 pitch: ANSI

Dual Gothic

Your particular printout requirements can always be met by Qume's singlestrike, multistrike or fabric quality ribbons.

12 pitch: WP, Legal 2

Essay

Qume means convenience. Qume's carbon ribbons have a clear leader for easy no-mess installation.

Proportional space: WPS

Theme 10 Pt.

Qume plastic printwheels have greater resistance to mechanical hazards.

Proportional space: WP

Light Italic

The longer life and lower unit cost of Qume plastic printwheels provide the user with greater dollar value.

12 pitch: APL 10, WP, Danmark/Norge

Polygo Pica

The precision construction and perfect alignment of Qume's ribbon cartridge prevents warpage and case-related ribbon failure.

10 pitch: WP

Courier

Available in a large variety of colors, Qume Ribbons provide the user with the best value, strike after strike.

10 pitch: WP, Bilingual, Multi, Deutschland, Legal 2, England, Danmark/Norge 2

12 pitch: WP, ESA, UKN

Elite

Qume's printwheels are long-lasting, consistently reliable and designed to provide outstanding quality.

12 pitch: German, Multi, ESA, UKN, WP

Qume Printwheels

Gothic

Qume's ribbons are engineered to allow smooth, efficient operation for maximum character yield.

10 pitch: Katakana
15 pitch: WP

Thesis

With Qume's WPS sequence printwheels, the highest quality proportional spacing is possible on any plastic printwheel printer.

Proportional space: WPS

Essay Italic

Essay Italic combines the high quality and legibility of proportional spacing with the gracefulness of an italic typestyle.

Proportional space: WPS

Title

The longer life of the Qume Multistrike II means greater convenience, less handling and fewer inventory storage problems.

Proportional space: WPS

Boldface Italic

The new Qume Multistrike II gives you the quality you expect from a Qume product -- plus 50% longer life!

Proportional space: WPS
England/WPS
Deutschland/WPS

Large Elite

Now proportional spacing is available at greater speed and lower cost than ever before possible.

12 pitch: WP

Cubic

The new design of the Qume Multistrike II means easier and faster loading, as well as less handling of the ribbon.

Proportional space: WPS

Boldface

Boldface is a classic style, originally designed for newspaper use. It is striking and formal in appearance.

Proportional space: WPS,
England/WPS,
Deutschland/WPS

Arcadia

All Qume WPS printwheels are completely interchangeable and can be used on any printer with appropriate software support.

Proportional space: WPS,
Bilingual/WPS

Printwheel listing by product number.

PRODUCT NUMBER	SEQUENCE	TYPE STYLE	PITCH		
80075	GERMAN	ELITE	12	¢!"§$%&´()*+,-./	0123456
*80961	WP	THEME 10 PT	PS	|!"#$%&'(´)*+,-./	0123456
80962	APL 10	LIGHT ITALIC	12	•¨)<≤=>]∨∧≠÷,+./	0123456
80964	WP	LIGHT ITALIC	12	|!"#$%&'()*+,-./	012345678
80966	WP	COURIER	12	|!"#$%&'()*+,-./	012345678
80968	MULTI	ELITE	12	£!"#$%&'()*+,-./	012345678
80973	WB	PRESTIGE ELITE	12	|¡"#$%&'()*+,-./	^¿23456789
80974	AY	BOOKFACE ACADEMIC	10	£!"#$%&'()*+,-./	0123456789
*80981	COMMERCIAL	DOCUMENTARY	PS	"#$%&'()*+,-./	0123456789
80984	ESA	ELITE	12	ı!"#$%&'()*+,-./	0123456789
80985	UKN	ELITE	12	£!"#$%&'()*+,-./	0123456789
80986	ESA	COURIER	12	ı!"#$%&'()*+,-./	0123456789
80987	UKN	COURIER	12	£!"#$%&'()*+,-./	0123456789
80988	ESA	LETTER GOTHIC	12	ı!"#$%&'()*+,-./	0123456789
80989	UKN	LETTER GOTHIC	12	£!"#$%&'()*+,-./	0123456789
*80994	LEGAL	DOCUMENTARY	PS	"¶$%&'()*+,-./	0123456789
82050	WP	COURIER	10	|!"#$%&'()*+,-./	0123456789
82051	WP	PICA	10	|!"#$%&'()*+,-./	0123456789
82052	WP	PRESTIGE ELITE	12	|!"#$%&'()*+,-./	0123456789
82053	BILINGUAL	COURIER	10	£!"#$%&'()*+,-./	0123456789
82054	BILINGUAL	PRESTIGE ELITE	12	£!"#$%&'()*+,-./	0123456789
82055	MULTI	PICA	10	£!"#$%&'()*+,-./	0123456789
82056	UK	PICA	10	£!"#$%&'()*+,-./	0123456789
82057	WP	ORATOR 90%	10	|!"#$%&'()*+,-./	0123456789
82058	WP	PRESTIGE PICA	10	|!"#$%&'()*+,-./	0123456789
82059	WP	DUAL GOTHIC	12	|!"#$%&'()*+,-./	0123456789
82060	WP	COURIER ITALIC	12	|!"#$%&'()*+,-./	0123456789
82061	WP	BOOKFACE ACADEMIC	10	|!"#$%&'()*+,-./	0123456789
82062	A-N SYMBOL 1	LETTER GOTHIC	12	|±"ΔΩ%α'()*+,-./	0123456789
82063	SYMBOL 2	GREEK/MATH	12	≈π○{}}∫÷[μ₊‡´/~Å	0123456789
82064	ANSI	OCR-A	10	N̄|"£$%&'{}*+,-./	0123456789
82065	ANSI	OCR-B	10	£!"#$%&'()*+,-./	0123456789
82066	BILINGUAL	LETTER GOTHIC	12	£!"#$%&'()*+,-./	0123456789
82067	MULTI	LETTER GOTHIC	12	£!"#$%&'()*+,-./	012345678
82068	MULTI	COURIER	10	£!"#$%&'()*+,-./	012345678

*This printwheel may not be compatible with your printer or terminal.
Please verify with your systems supplier that your system software supports this printwheel.

CHARACTER SET (IN ASCENDING ASCII ORDER)

Printwheel listing by product number.

PRODUCT NUMBER	SEQUENCE	TYPE STYLE	PITCH	
*82069	WP	THEME 11 PT	PS	|!"#$%&'()*+,-./ 0123456789
82070	WP	ELITE	12	|!"#$%&'()*+,-./ 0123456789
82074	DEUTSCHLAND	PICA	10	#!"§$%&´()*+,-./ 0123456789
82075	SVERIGE/SUOMI	PICA	10	½!"£$%&´()*+,-./ 0123456789
82076	ENGLAND	PICA	10	‖!"£$%&'()*+,-./ 0123456789
82077	DANMARK/NORGE	PICA	10	½!"£$%&´()*+,-./ 0123456789
82078	FRANCE	PICA	10	à!"£$%&'()*+,-./ 0123456789
82079	SCHWEIZ	PICA	10	ù!"£$%&'()*+,-./ 0123456789
82080	ITALIA	PICA	10	‰!"£$%&'()*+,-./ 0123456789
82081	NEDERLAND	PICA	10	´!"£$%&'()*+,-./ 0123456789
82082	ESPANA	PICA	10	a!"£$%&'()*+,-./ 0123456789
82084	KATAKANA	GOTHIC	10	ヲ!"#$%ヒ°ヒメフ+,-.ル 0123456789
82085	DEUTSCHLAND	COURIER	10	#!"§$%&´()*+,-./ 0123456789
82087	ENGLAND	COURIER	10	‖!"£$%&'()*+,-./ 0123456789
82088	ENGLAND	PRESTIGE ELITE	12	‖!"£$%&'()*+,-./ 0123456789
82089	WP	LETTER GOTHIC	12	|!"#$%&'()*+,-./ 0123456789
82090	WP	GOTHIC	15	|!"#$%&'()*+,-./ 0123456789
82096	WP	POLYGO PICA	10	|!"#$%&'()*+,-./ 0123456789
82098	ESA	PICA	10	ı!"#$%&'()*+,-./ 0123456789
82099	UKN	PICA	10	£!"#$%&'()*+,-./ 0123456789
82150	DEUTSCHLAND	LETTER GOTHIC	12	#!"§$%&´()*+,-./ 0123456789
*82152	DEUTSCHLAND	THEME 11	PS	#!"§$%&´()*+,-./ 0123456789
82153	SVERIGE/SUOMI	PRESTIGE ELITE	12	½!"£$%&´()*+,-./ 0123456789
82154	DANMARK/NORGE	PRESTIGE ELITE	12	½!"£$%&´()*+,-./ 0123456789
*82155	NASKH	ARABIC 10 PT	PS	×ـ ـلاكلا ـه ه حل حن/ـ+(٣ى م ٢ ١ ٠
82156	FRANCE	PRESTIGE ELITE	12	à!"£$%&'()*+,-./ 0123456789
82157	DEUTSCHLAND	PRESTIGE ELITE	12	#!"§$%&´()*+,-./ 0123456789
82158	SCHWEIZ	PRESTIGE ELITE	12	ù!"£$%&'()*+,-./ 0123456789
82160	NEDERLAND	PRESTIGE ELITE	12	´!"£$%&'()*+,-./ 0123456789
82161	ESPANA	PRESTIGE ELITE	12	a!"£$%&'()*+,-./ 0123456789
*82162	WPS	THESIS	PS	|!"#$%&'()*+,-./ 0123456789:;
82164	LEGAL 2	COURIER	10	¢!"#$%&°()*+,-./ 0123456789
82165	LEGAL 2	PRESTIGE ELITE	12	¢!"#$%&°()*+,-./ 0123456789
82166	LEGAL 2	DUAL GOTHIC	12	¢!"#$%&°()*+,-./ 0123456789
82167	ASCII 96	PRESTIGE ELITE	12	¢!"#$%&´()*+,-./ 0123456789

*This printwheel may not be compatible with your printer or terminal.
Please verify with your systems supplier that your system software supports this printwheel.

CHARACTER SET (IN ASCENDING ASCII ORDER)

: ; <=>?	@ABCDEFGHIJKLMNOPQRSTUVWXYZ[®]©_	°abcdefghijklmnopqrstuvwxyz§¶†™_
: ; <=>?	@ABCDEFGHIJKLMNOPQRSTUVWXYZ[®]©_	°abcdefghijklmnopqrstuvwxyz§¶†™_
: ; ²=³?	ßABCDEFGHIJKLMNOPQRSTUVWXYZÜÖÄ'_	`abcdefghijklmnopqrstuvwxyzüöäµ°
: ; <=>?	§ABCDEFGHIJKLMNOPQRSTUVWXYZÄÖÅ^_	`abcdefghijklmnopqrstuvwxyzäöåü'
: ; ⅛=⅜?	@ABCDEFGHIJKLMNOPQRSTUVWXYZ[½]¼_	°abcdefghijklmnopqrstuvwxyz⅝|¾⅞_
: ; <=>?	§ABCDEFGHIJKLMNOPQRSTUVWXYZÆØÅ^_	`abcdefghijklmnopqrstuvwxyzæøå¨'
: ; ²=³?	§ABCDEFGHIJKLMNOPQRSTUVWXYZ[ç]^_	½abcdefghijklmnopqrstuvwxyzéùè¨°
: ; è=´?	§ABCDEFGHIJKLMNOPQRSTUVWXYZéçà^_	°abcdefghijklmnopqrstuvwxyzäöü¨`
: ; <=>?	§ABCDEFGHIJKLMNOPQRSTUVWXYZ½çé^_	ùabcdefghijklmnopqrstuvwxyzàòèì°
: ; <=>?	¾ABCDEFGHIJKLMNOPQRSTUVWXYZ[½]^_	`abcdefghijklmnopqrstuvwxyz¨ƒ¼~°
: ; <=>?	@ABCDEFGHIJKLMNOPQRSTUVWXYZ¡Ñ¿^_	`abcdefghijklmnopqrstuvwxyzíñ‰´º
ッ ; マ¥ネス	ヲABCDEFGHIJKLMNOPQRSTUVWXYZミアロノ_	レクヨウテニモカナユタソシツコトホワキチオリンムイヤエヲラケ(へ
: ; ²=³?	ßABCDEFGHIJKLMNOPQRSTUVWXYZÜÖÄ'_	`abcdefghijklmnopqrstuvwxyzüöäµ°
: ; ⅛=⅜?	@ABCDEFGHIJKLMNOPQRSTUVWXYZ[½]¼_	°abcdefghijklmnopqrstuvwxyz⅝|¾⅞_
: ; ⅛=⅜?	@ABCDEFGHIJKLMNOPQRSTUVWXYZ[½]¼_	°abcdefghijklmnopqrstuvwxyz⅝|¾⅞_
: ; <=>?	@ABCDEFGHIJKLMNOPQRSTUVWXYZ[®]©_	°abcdefghijklmnopqrstuvwxyz§¶†™_
: ; <=>?	@ABCDEFGHIJKLMNOPQRSTUVWXYZ[®]©_	°abcdefghijklmnopqrstuvwxyz§¶†™_
: ; <=>?	@ABCDEFGHIJKLMNOPQRSTUVWXYZ[®]©_	°abcdefghijklmnopqrstuvwxyz§¶†™_
: ; ^=¨?	¿ABCDEFGHIJKLMNOPQRSTUVWXYZ´|¸°_	`abcdefghijklmnopqrstuvwxyz§ß£~¡
: ; <=>?	@ABCDEFGHIJKLMNOPQRSTUVWXYZ[æ]´_	°abcdefghijklmnopqrstuvwxyz§Æø¨`
: ; ²=³?	ßABCDEFGHIJKLMNOPQRSTUVWXYZÜÖÄ'_	`abcdefghijklmnopqrstuvwxyzüöäµ°
: ; ²=³?	ßABCDEFGHIJKLMNOPQRSTUVWXYZÜÖÄ'_	`abcdefghijklmnopqrstuvwxyzüöäµ°
: ; <=>?	§ABCDEFGHIJKLMNOPQRSTUVWXYZÄÖÅ^_	`abcdefghijklmnopqrstuvwxyzäöåü'
: ; <=>?	§ABCDEFGHIJKLMNOPQRSTUVWXYZÆØÅ^_	`abcdefghijklmnopqrstuvwxyzæøå¨'
٦ ن ٌ مـ	٧ ـَ ٨ق صـ ط و ـِ ك ص ـْ ف ص . ب ـّ س ـً ذ ٩	ح (، ٠ ـكـحـهـن ـْ لا ـعـ ـرـ ـِ ع د ؟ ه ا ا ل ح ى ط ـّ و ذ ـُ م ق ك ح ـصـ
: ; ²=³?	§ABCDEFGHIJKLMNOPQRSTUVWXYZ[ç]^_	½abcdefghijklmnopqrstuvwxyzéùè¨°
: ; ²=³?	ßABCDEFGHIJKLMNOPQRSTUVWXYZÜÖÄ'_	`abcdefghijklmnopqrstuvwxyzüöäµ°
: ; è=´?	§ABCDEFGHIJKLMNOPQRSTUVWXYZéçà^_	°abcdefghijklmnopqrstuvwxyzäöü¨`
: ; <=>?	¾ABCDEFGHIJKLMNOPQRSTUVWXYZ[½]^_	`abcdefghijklmnopqrstuvwxyz¨ƒ¼~°
: ; <=>?	@ABCDEFGHIJKLMNOPQRSTUVWXYZ¡Ñ¿^_	`abcdefghijklmnopqrstuvwxyzíñ‰´º
<=>?	@ABCDEFGHIJKLMNOPQRSTUVWXYZ[®]	©_ °abcdefghijklmnopqrstuvwxyz§¶†™ _
: ; §=†?	@ABCDEFGHIJKLMNOPQRSTUVWXYZ[®]©_	'abcdefghijklmnopqrstuvwxyz¾_¶™½
: ; §=†?	@ABCDEFGHIJKLMNOPQRSTUVWXYZ[®]©_	'abcdefghijklmnopqrstuvwxyz¼_¶™½
: ; §=†?	@ABCDEFGHIJKLMNOPQRSTUVWXYZ[®]©_	'abcdefghijklmnopqrstuvwxyz¼_¶™½
: ; <=>?	@ABCDEFGHIJKLMNOPQRSTUVWXYZ[\]^_	`abcdefghijklmnopqrstuvwxyz{|}~¬

Printwheel listing by product number.

PRODUCT NUMBER	SEQUENCE	TYPE STYLE	PITCH	
82168	BILINGUAL	BOOKFACE ACADEMIC	10	£!"#$%&'()*+,-./ 0123456789
82170	MULTI	BOOKFACE ACADEMIC	10	£!"#$%&'()*+,-./ 0123456789
82180	WP	LARGE ELITE	12	|!"#$%&'()*+,-./ 0123456789
*82190	WPS	BOLDFACE	PS	|!"#$%&'()*+,-./ 0123456789:;
*82191	WPS	BOLDFACE ITALIC	PS	*|!"#$%&'()*+,-./ 0123456789:;*
*82193	WPS	ARCADIA	PS	|!"#$%&'()*+,-./ 0123456789:;
*82194	WPS	MODERN	PS	|!"#$%&'()*+,-./ 0123456789:;
*82195	WPS	TITLE	PS	|!"#$%&'()*+,-./ 0123456789:;
*82196	WPS	ESSAY ITALIC	PS	*|!"#$%&'()*+,-./ 0123456789:;*
82197	SVERIGE/SUOMI	LETTER GOTHIC	12	½!"£$%&´()*+,-./ 0123456789
*82199	WPS	ESSAY	PS	|!"#$%&'()*+,-./ 0123456789:;
*82250	WPS	CUBIC	PS	|!"#$%&'()*+,-./ 0123456789:;
*82251	DEUTSCHLAND/WPS	BOLDFACE	PS	ß!"§$%&'()*+,-./ 0123456789:;
*82252	DEUTSCHLAND/WPS	BOLDFACE ITALIC	PS	*ß!"§$%&'()*+,-./ 0123456789:;*
*82254	ENGLAND/WPS	BOLDFACE	PS	‖!"£$%&'()*+,-./ 0123456789:;
*82255	ENGLAND/WPS	BOLDFACE ITALIC	PS	*‖!"£$%&'()*+,-./ 0123456789:;*
82265	METRIC	LETTER GOTHIC	12	⁻⁹"µΩ%·'()¹+,-./ 0123456789
82267	DANMARK/NORGE 2	COURIER	10	½!"£$%&´()|+,-./ 0123456789
82271	DANMARK/NORGE	LIGHT ITALIC	12	*½!"£$%&'()*+,-./ 0123456789*
*82274	BILINGUAL/WPS	ARCADIA	PS	£!"#$%&'()*+,-./ 0123456789:;
*82275	BILINGUAL/WPS	MODERN	PS	£!"#$%&'()*+,-./ 0123456789:;
82279	ENGLAND	ORATOR 90%	10	‖!"£$%&'()*+,-./ 0123456789
82285	PORTUGAL	PICA	10	a!"£$%&'()*+,-./ 0123456789
82287	PORTUGAL	PRESTIGE ELITE	12	a!"£$%&'()*+,-./ 0123456789

*This printwheel may not be compatible with your printer or terminal.
Please verify with your systems supplier that your system software supports this printwheel.

CHARACTER SET (IN ASCENDING ASCII ORDER)

:;`="?	@ABCDEFGHIJKLMNOPQRSTUVWXYZ[½]^_	°abcdefghijklmnopqrstuvwxyzç|¾´¼
:;`="?	ÆABCDEFGHIJKLMNOPQRSTUVWXYZµ½ß^_	°abcdefghijklmnopqrstuvwxyzçæ§´ƒ
:;<=>?	@ABCDEFGHIJKLMNOPQRSTUVWXYZ[®]©_	°abcdefghijklmnopqrstuvwxyz§¶†™_
<=>?	**@ABCDEFGHIJKLMNOPQRSTUVWXYZ[®]**	**©_°abcdefghijklmnopqrstuvwxyz§¶†™_**
<=>?	*@ABCDEFGHIJKLMNOPQRSTUVWXYZ[®]*	*©_°abcdefghijklmnopqrstuvwxyz§¶†™_*
<=>?	@ABCDEFGHIJKLMNOPQRSTUVWXYZ[®]	©_°abcdefghijklmnopqrstuvwxyz§¶†™_
<=>?	@ABCDEFGHIJKLMNOPQRSTUVWXYZ[®]	©_°abcdefghijklmnopqrstuvwxyz§¶†™_
<=>?	**@ABCDEFGHIJKLMNOPQRSTUVWXYZ[®]**	**©_°abcdefghijklmnopqrstuvwxyz§¶†™_**
<=>?	*@ABCDEFGHIJKLMNOPQRSTUVWXYZ[®]*	*©_°abcdefghijklmnopqrstuvwxyz§¶†™_*
:;<=>?	§ABCDEFGHIJKLMNOPQRSTUVWXYZÄÖÅ^_	`abcdefghijklmnopqrstuvwxyzäöåü'
<=>?	@ABCDEFGHIJKLMNOPQRSTUVWXYZ[®]	©_°abcdefghijklmnopqrstuvwxyz§¶†™_
<=>?	@ABCDEFGHIJKLMNOPQRSTUVWXYZ[®]	©_°abcdefghijklmnopqrstuvwxyz§¶†™_
Ü=³?	äABCDEFGHIJKLMNOPQRSTUVWXYZÖÄ#	`_µabcdefghijklmnopqrstuvwxyz´²°öü
Ü=³?	*äABCDEFGHIJKLMNOPQRSTUVWXYZÖÄ#*	*`_µabcdefghijklmnopqrstuvwxyz´²°öü*
⅛=⅜?	@ABCDEFGHIJKLMNOPQRSTUVWXYZ[½]	¼_°abcdefghijklmnopqrstuvwxyz⅝|¾⅞_
⅛=⅜?	*@ABCDEFGHIJKLMNOPQRSTUVWXYZ[½]*	*¼_°abcdefghijklmnopqrstuvwxyz⅝|¾⅞_*
:;`="?	²ABCDEFGHIJKLMNOPQRSTUVWXYZ)³(^_	°abcdefghijklmnopqrstuvwxyzçℓ⁶´±
:;<=>?	§ABCDEFGHIJKLMNOPQRSTUVWXYZÆØÅ^_	`abcdefghijklmnopqrstuvwxyzæøå¨'
:;<=>?	*§ABCDEFGHIJKLMNOPQRSTUVWXYZÆØÅ^_*	*`abcdefghijklmnopqrstuvwxyzæøå¨'*
`="?	@ABCDEFGHIJKLMNOPQRSTUVWXYZ[½]	^_·°abcdefghijklmnopqrstuvwxyzç|¾´¼
`="?	@ABCDEFGHIJKLMNOPQRSTUVWXYZ[½]	^_°abcdefghijklmnopqrstuvwxyzç|¾´¼
:;⅛=⅜?	@ABCDEFGHIJKLMNOPQRSTUVWXYZ[½]¼_	°ABCDEFGHIJKLMNOPQRSTUVWXYZ⅝|¾⅞_
:;<=>?	@ABCDEFGHIJKLMNOPQRSTUVWXYZ¡Ñ¿^_	`abcdefghijklmnopqrstuvwxyzíñç´º
:;<=>?	@ABCDEFGHIJKLMNOPQRSTUVWXYZ¡Ñ¿^_	`abcdefghijklmnopqrstuvwxyzíñç´º

Multistrike II™ and Multistrike III™

Multistrike III. Long after the others fade, it still makes a lasting impression.

Now Qume gives your system another boost in productivity and economy with its brand-new Multistrike III ribbon. Multistrike III offers 50% more characters per cartridge – roughly 300,000 characters. But not at 50% more cost. With this high-quality, longer-life ribbon, you change ribbons less often, are interrupted less frequently, and print more pages of text per ribbon. And, you can lower your cost per character printed, thus lowering the cost of your word processing operation.

Multistrike II. High performance at a low cost.

If you don't need all of the additional capacity provided by Multistrike III, there's Multistrike II. It offers the same capacity as Qume's popular Multistrike – roughly 200,000 characters. Yet it doesn't cost any more. That's progress.

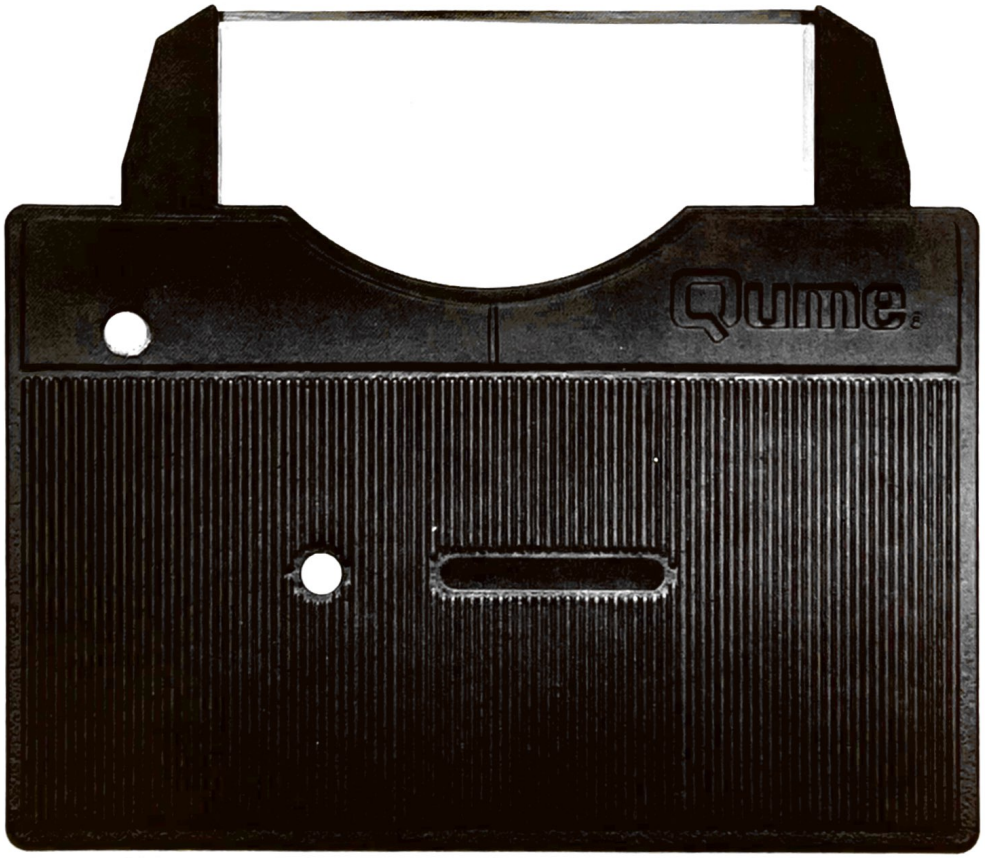

New Quickload Cartridge

Quickload™

Quickload

Qume's newly designed ribbon cartridge with arms for quicker, easier loading. Available in both the standard-length Multistrike II and the long-lasting Multistrike III, Quickload provides you with the following benefits:

Clear Leader — Allows operator to install ribbon with no mess. Also activates end-of-ribbon detect feature, when available, on printer.

Precision Case — Ruggedly constructed and welded to prevent warpage and eliminate case-related ribbon failures.

Drive Motor Engagement Gears — Allows ribbon advance to be controlled by printer, ensuring uniformity of drive.

Slip Clutch Advance Mechanism — Provides constant uniform take-up tension for more reliable rewind of used ribbon.

Foam Tension Pad on Top Cover — Imparts uniform tension over entire length of ribbon for more efficient use of ribbon print area.

High-Quality Ribbon — High-quality raw ribbon and exclusive coating process provide excellent-density non-smear printing with sharp characters.

And for your other application requirements, Qume offers a full line of ribbon products. Colors and descriptions are shown on the following page.

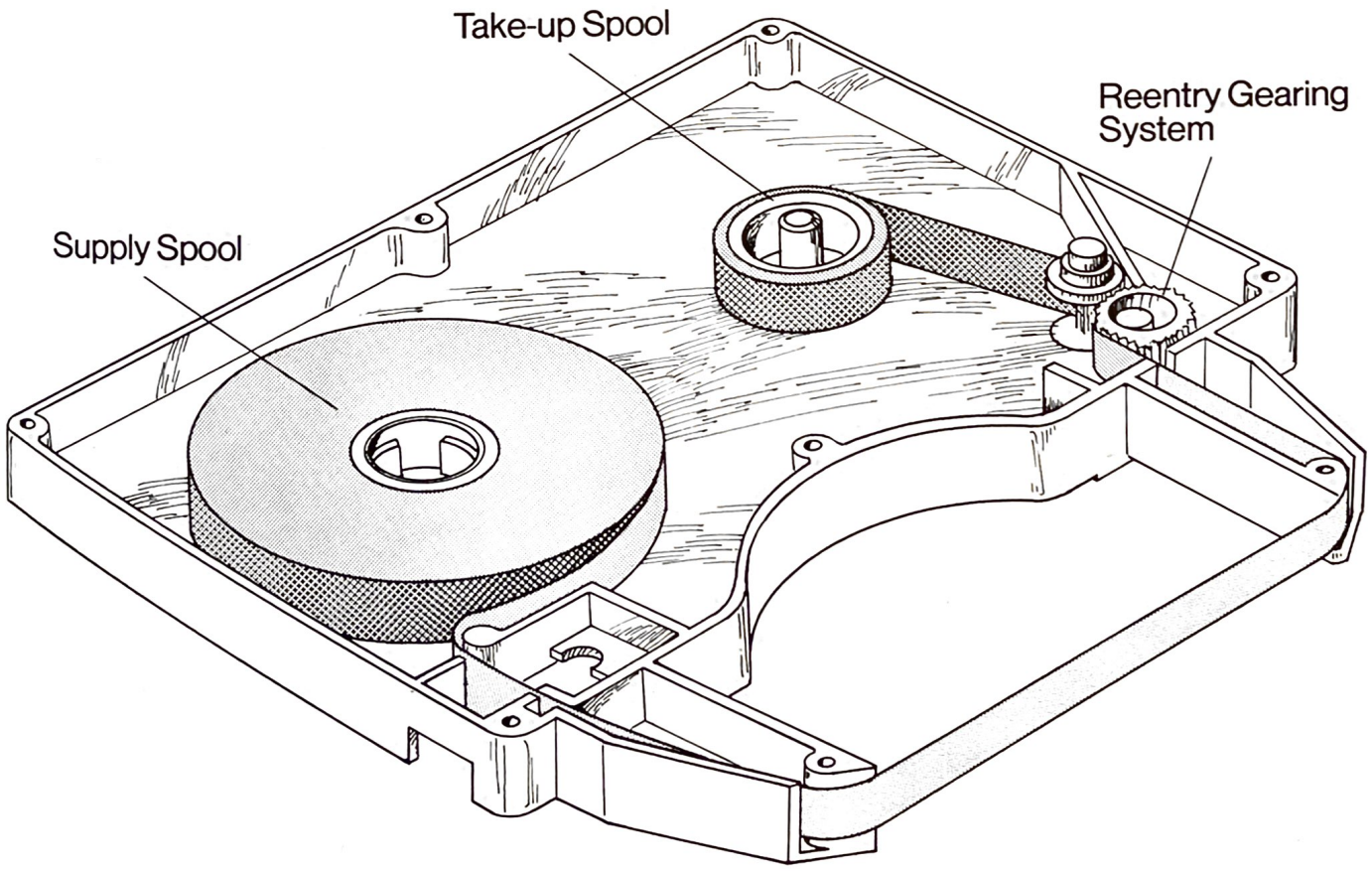

Qume Ribbon Cartridges

Fabric

Qume fabric ribbons, in continuous-loop cartridges, are ideal for typing stations with heavy typing loads or those where unattended printing is required. They provide a high-image density for extended periods of usage.

Black #80009-01 (HEAVY INKING)

Black #80009-02 (MEDIUM INKING)

Cocoa #80009-03

Plum #80009-23

Rouge #80009-33

Forest #80009-43

Denim #80009-53

Red/Black #80009-63

Blue/Black #80009-64

Green/Black #80009-65

Brown/Black #80009-66

Green/Blue #80009-79

Multistrike II

Qume's new easy-loading ribbon cartridge, with the same excellent print quality and economical throughput of the Multistrike ribbon.

Black #83990-01

Multistrike III

Qume's newest ribbon, with 50% longer life than the standard Multistrike. Requires less-frequent changing, fewer interruptions of long jobs. Easier loading, too. (Also comes in a clear demonstration cartridge, part number 83991-12).

Black #83991-01

Multistrike

Excellent print quality from carbon film ribbon, yet proportional ribbon advance provides economy throughput and extended ribbon life.

Black #80029-02

Slate #80029-12

Denim #80029-22

Light Cocoa #80029-37

Singlestrike

Full carbon-transfer ribbon offers the finest print quality available. Ideally suited for applications where the requirement for quality is paramount.

Black #80039-02

2350 Qume Drive
San Jose, CA 95131
Tel: (408) 942-4000
TWX: 910-338-0232

Qume Caribe Inc.
P.O. Box 398
Humacao, Puerto Rico 00661
Tel: (809) 852-2490
Telex: 345-0573

Form #80-324A 2/80 20K
©1980 Qume Corporation. Specifications subject to change without notice.